公司简介 Brief introduction of the company

XR系列 旋挖钻机

XR Series Rotary Drilling Rig

XR120D

XR150

XR150D/II

XR180D/II

XR220D/II

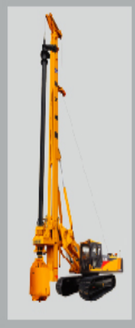

XR260D

XR280D/II

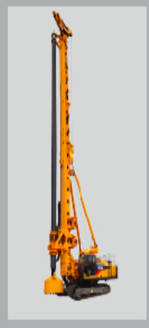

XR320D

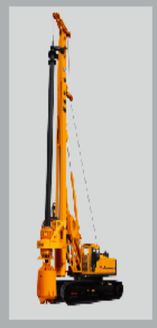

XR360

XR400D

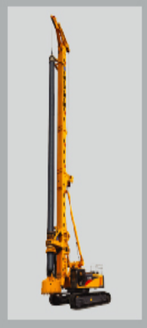

XR460D

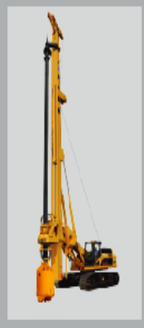

XR230C

XR280C

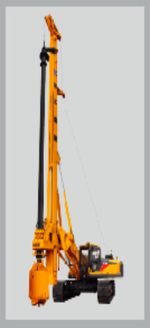

XRS680

XRS1050

XCMG | Machmall.com

Web: machmall.com
Tel: +86-516 8773 9797
E: machmall@xcmg.com

XR120D 旋挖钻机
Rotary Drilling Rig

性能特点

后倾大三角结构，固定变幅支撑，运输方便的同时提高了工作机构的刚度，增强整机工作稳定性，适合小吨位钻机的工况；

进口川崎液压件，动力系统匹配合理，施工效率高；

进口康明斯发动机，可选两种油门控制方式，让您的耗油量降到最低；

副卷扬工作幅度加大，可满足轻小物体的吊装，节约辅助设备成本；

主卷扬采用大排量马达设计，反应更灵敏，工作更可靠，小直径桩孔施工卸土不再困难；

标配变径节，根据施工需要调整钻杆组合，有效降低油耗，提高施工效率；

具有知识产权的智能控制系统，CAN总线和PLC控制系统的应用，包括钻桅垂直度自动/手动调整、深度自动检测显示、智能故障诊断控制等。

Performance Characteristics

It introduces the back-inclination large triangle structure with stationary luffing support, which is suitable for working conditions of low-tonnage drilling rig, improving the rigidity of working mechanism and enhancing the stability of whole drilling rig while achieving easy transportation;

The imported Kawasaki hydraulic parts can achieve reasonable powertrain matching and high construction efficiency;

The imported Cummins engine can minimize fuel consumption with the help of two optional accelerator control modes;

The working amplitude of auxiliary winch is increased, which can hoist light and small objects and save cost as well;

The main winch is designed with a high displacement motor, achieving more sensitive response and more reliable working and also getting rid of the difficulty in earth dumping for pile holes of small diameter;

The standard reducer joint can adjust drill rod combination according to actual conditions, thus effectively reducing fuel consumption and improving construction efficiency;

It introduces the proprietary intelligent control system, CAN bus and PLC, including automatic/manual adjustment of drilling mast verticality, depth automatic detection and display, intelligent fault diagnosis and control.

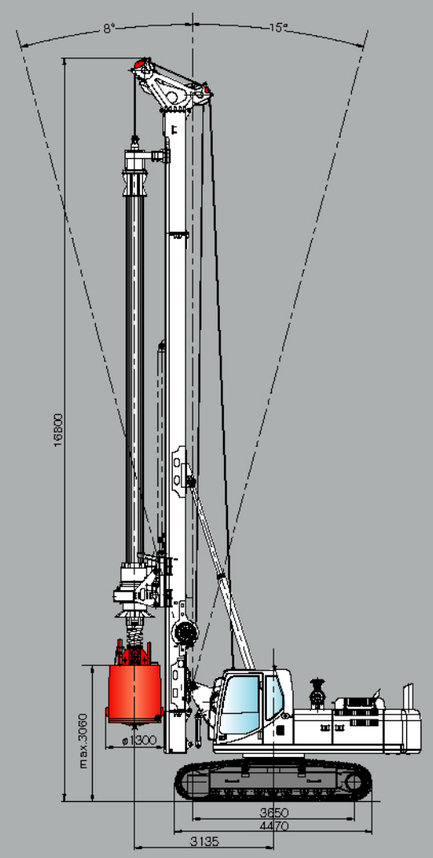

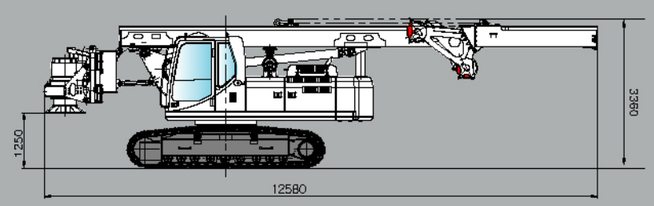

XR120D 旋挖钻机主要技术参数
Main Technical Data of XR Series Multi-functional Combined Rotary Drilling Rig

主要技术参数 Main Technical Specification			
发动机 Engine	型号 Model		康明斯 B5.9-C
	额定功率 Rated Power	kW	112 /1950
动力头 Rotary Drive	最大输出扭矩 Max. output torque	kN・m	120
	转速 Rotary speed	r/min	6 ~ 30
最大钻孔直径 Max. Drilling Diameter		mm	ϕ1300
最大钻孔深度 Max. Drilling Depth		m	标配44 (摩阻5节)\选配35 (机锁4节)
加压油缸 Pull-Down Cylinder	最大压力 Max. pull-down piston push	kN	120
	最大提升力 Max. pull-down piston pull	kN	120
	最大行程 Max. pull-down piston stroke	m	3.5
主卷扬 Main Winch	最大提升力 Max. Pulling force	kN	100
	最大卷扬速度 Max. line speed	m/min	70
副卷扬 Auxiliary Winch	最大提升力 Max. Pulling force	kN	45
	最大卷扬速度 Max. line speed	m/min	70
钻桅倾度 Mast Rake	侧向 / 前倾 / 后倾 Side/forwards/backwards		±3° / 8° /15°
底 盘 Undercarrige	最大行走速度 Max. traveling speed	km/h	3.2
	最大爬坡度 Max. grade ability	%	40
	最小离地点间隙 Min. Clearance	mm	450
	履带板宽度 Track shoe width	mm	700
	履带最大总宽 Distance between tracks	mm	3400
液压系统 Hydraulic System	工作压力 Working pressure	Mpa	32
整机工作质量 Overall Drilling Weight		t	40
外形尺寸 Dimension	工作状态 Working condition	mm	7175X3400X16800
	运输状态 Transportation condition	mm	12580X3400X3360

XR150 旋挖钻机
Rotary Drilling Rig

性能特点

采用单层绳主卷扬，有效解决钢丝绳磨损问题，提高钢丝绳使用寿命。

负荷传感液压系统及极限功率控制系统,更加节能高效。

彩色液晶显示屏使操作简便灵活，钻孔深度、垂直度自动检测控制，故障自动控制报警系统。

履带可伸缩自制底盘，H形车架结构，满足超强的稳定性。

可不拆卸钻杆运输，转场方便快捷。

GPS全球卫星定位系统，整机工况实现远程数据分析，具有远程实时监控、远程故障诊断功能。

Performance Characteristics

The wire rope of the main winch is coiled into single layer, which effectively solves the wear problem of the wire rope and prolongs the service life of the rope.

Load sensing hydraulic system and limit power control system, allowing energy saving and high efficiency.

Color LCD enabling simple operation; auto detection and control over drilling depth and verticality; auto fault warning system.

Telescopic caterpillar, self-manufactured undercarriage and H-shaped frame structure, enabling excellent stability.

Non-removable drill rod transportation, easy site transfer.

Global satellite positioning system (GPS), allowing remote data analysis, real-time monitoring and fault diagnosis of complete machine.

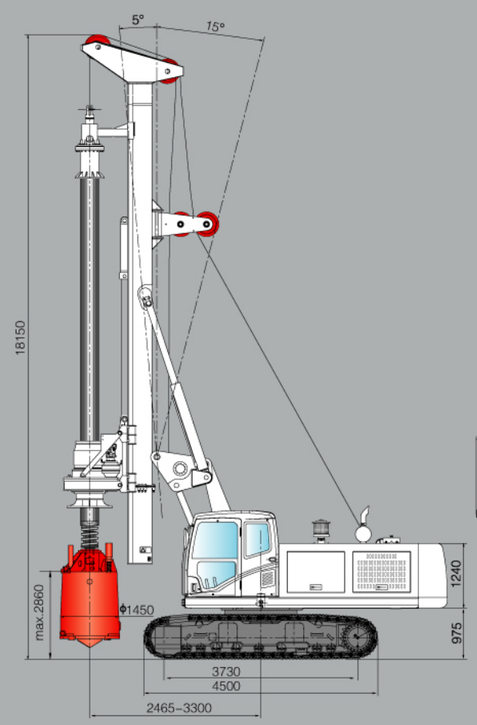

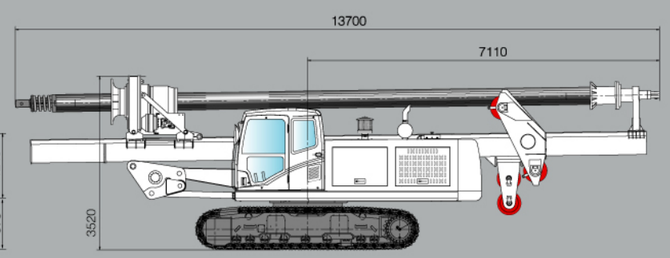

XR150 旋挖钻机主要技术参数

Main Technical Data of XR Series Multi-functional Combined Rotary Drilling Rig

主要技术参数 Main Technical Specification			
发动机 Engine	型号 Model		CUMMINS 6CTAA8.3-C185
	额定功率 Rated Power	kW	138
动力头 Rotary Drive	最大输出扭矩 Max. output torque	kN・m	150
	转速 Rotary speed	r/min	8~30
最大钻孔直径 Max. Drilling Diameter		mm	ϕ 1450
最大钻孔深度 Max. Drilling Depth		m	50
加压油缸 Pull-Down Cylinder	最大压力 Max. pull-down piston push	kN	114
	最大提升力 Max. pull-down piston pull	kN	148
	最大行程 Max. pull-down piston stroke	m	3.5
主卷扬 Main Winch	最大提升力 Max. Pulling force	kN	155
	最大卷扬速度 Max. line speed	m/min	65
副卷扬 Auxiliary Winch	最大提升力 Max. Pulling force	kN	60
	最大卷扬速度 Max. line speed	m/min	70
钻桅倾度 Mast Rake	侧向 / 前倾 / 后倾 Side/forwards/backwards		± 3° / 5° / 15°
底　盘 Undercarrige	最大行走速度 Max. traveling speed	km/h	2.0
	最大爬坡度 Max. grade ability	%	40
	最小离地点间隙 Min. Clearance	mm	352
	履带板宽度 Track shoe width	mm	800
	履带最大总宽 Distance between tracks	mm	3050 ~ 4100
液压系统 Hydraulic System	工作压力 Working pressure	Mpa	32
整机工作质量 Overall Drilling Weight		t	43.5
外形尺寸 Dimension	工作状态 Working condition	mm	7700 × 4100 × 18150
	运输状态 Transportation condition	mm	(带钻杆)13700 × 3050 × 3520
			12800 × 3050 × 3240

XR150D/Ⅱ 旋挖钻机
Rotary Drilling Rig

性能特点

采用原装进口康明斯涡轮增压发动机，动力强劲，性能可靠，独特的调速率设计，让您更省油。

可伸缩专用旋挖钻底盘，配备双箱体式变幅机构，便于运输与调整，保证工作稳定性与可靠性。

进口川崎液压原件，动力系统匹配合理，施工效率高。

GPS全球卫星定位系统应用，整机工况实现远程数据分析，并具有远程实时监控、远程故障诊断功能。

具有自主知识产权的智能控制系统，CAN总线和PLC控制系统的应用，包括钻桅垂直度自动/手动调整、深度自动检测显示、智能故障诊断控制等。

Performance Characteristics

Imported genuine Cummins turbo-supercharged engine, high power, reliable performance and unique speed droop design, saving more fuel.

Special telescopic rotary excavating undercarriage, equipped with double-box type derricking mechanism, easy for transportation and adjustment, enabling excellent operation stability and reliability.

Imported Kawasaki hydraulic components, reasonable power system matching and high construction efficiency.

Global satellite positioning system (GPS), allowing remote data analysis, real-time monitoring and fault diagnosis of complete machine.

Independent intellectual property intelligent control system, CAN bus and PLC control system application, including the mast verticality auto/manual adjustment, depth auto detection and display, intelligent fault diagnosis control etc.

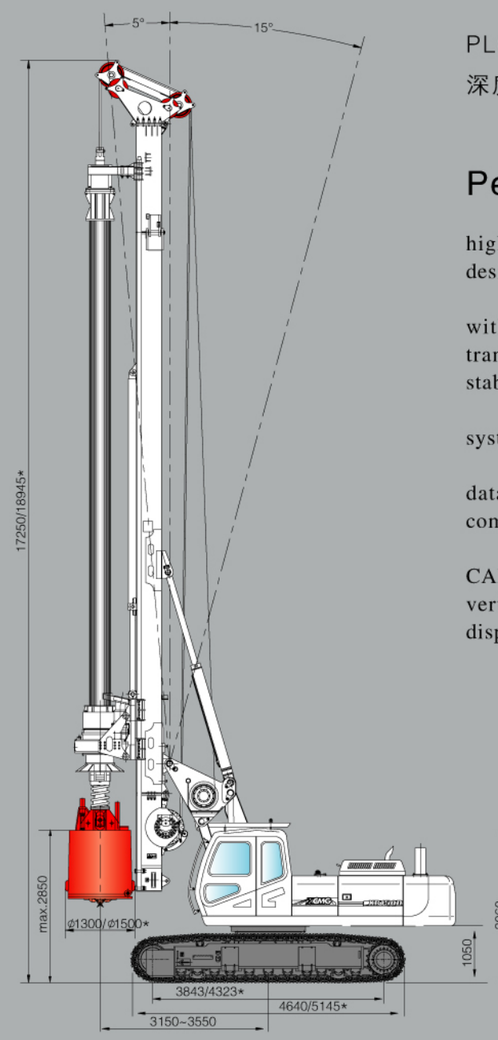

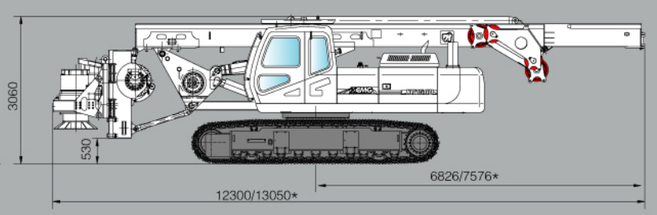

XR150D/Ⅱ 旋挖钻机主要技术参数
Main Technical Data of XR Series Multi-functional Combined Rotary Drilling Rig

主要技术参数 Main Technical Specification			
发动机 Engine	型号 Model		CUMMINS B5.9-C
	额定功率 Rated Power	kW	133
动力头 Rotary Drive	最大输出扭矩 Max. output torque	kN·m	150
	转速 Rotary speed	r/min	8~30
最大钻孔直径 Max. Drilling Diameter		mm	ϕ1300，ϕ1500*
最大钻孔深度 Max. Drilling Depth		m	55
加压油缸 Pull-Down Cylinder	最大压力 Max. pull-down piston push	kN	120
	最大提升力 Max. pull-down piston pull	kN	160
	最大行程 Max. pull-down piston stroke	m	3.5
主卷扬 Main Winch	最大提升力 Max. Pulling force	kN	145，155*
	最大卷扬速度 Max. line speed	m/min	75
副卷扬 Auxiliary Winch	最大提升力 Max. Pulling force	kN	50
	最大卷扬速度 Max. line speed	m/min	60
钻桅倾度 Mast Rake	侧向 / 前倾 / 后倾 Side/forwards/backwards		± 3° / 5° / 15°
底　盘 Undercarrige	最大行走速度 Max. traveling speed	km/h	3.2
	最大爬坡度 Max. grade ability	%	40
	最小离地点间隙 Min. Clearance	mm	352
	履带板宽度 Track shoe width	mm	800，700*
	履带最大总宽 Distance between tracks	mm	3200～4200，3100～4100*
液压系统 Hydraulic System	工作压力 Working pressure	Mpa	32
整机工作质量 Overall Drilling Weight		t	47,49*
外形尺寸 Dimension	工作状态 Working condition	mm	7122X4200X17250/7122X4100X18945*
	运输状态 Transportation condition	mm	12300X3200X3060/13050X3100X3060*

注：带“*”的参数为XR150D Ⅱ 对应的技术参数

XR180D/Ⅱ 旋挖钻机
Rotary Drilling Rig

性能特点

专用液压伸缩式履带底盘，重型回转支承，整机稳定高；

前置单排绳主卷扬结构，钢丝绳寿命大大延长，使用成本更低；

进口康明斯发动机，动力强劲，足够的功率储备满足高原施工，噪音、排放满足欧Ⅲ标准；

采用CAN总线全电控技术，简化了液压管路、提高整车的可靠性，充分体现了人、机、液、电的一体化。

可选卷扬加压、套管驱动功能，满足用户多种需求；

标配集中润滑系统，维护保养更便捷。

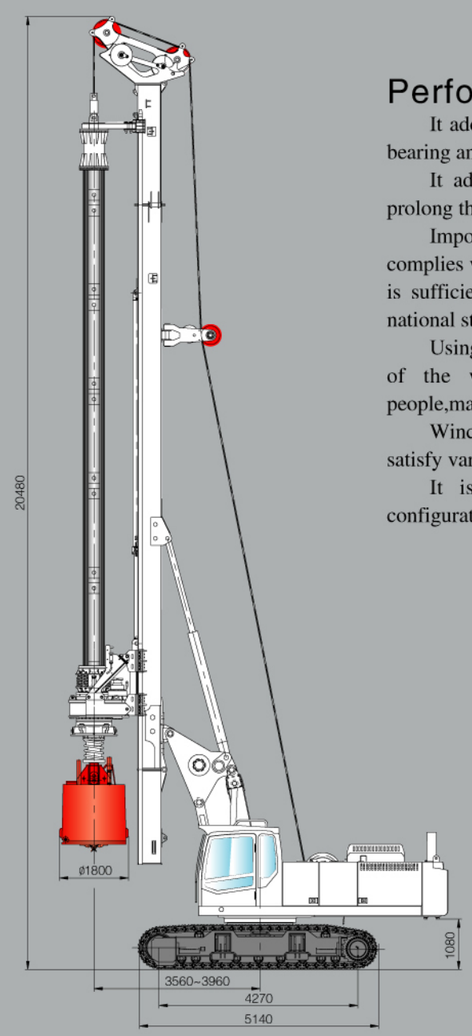

Performance Characteristics

It adopts dedicated hydraulic retractable crawler chassis and heavy slewing bearing and has high stability;

It adopts the front-located single-rope main winch structure to greatly prolong the service life of steel wire rope and lower the use cost.

Imported Cummins electric control turbo-supercharged engine is used. It complies with Euro III emission standard ,In addition, it has strong power, which is sufficient to satisfy the construction on the plateau. Its noise is up to the national standard.

Using full electronic control technogy of CAN bus,Improves the reliability of the whole vehicle and simplify hydraulic line,Fully reflects the people,machine,electricity and liquid integration.

Winch-crowd and sleeve-driven functions are available for selection to satisfy various needs of the users;

It is equipped with a centralized lubrication system as standard configuration; maintenance is easier.

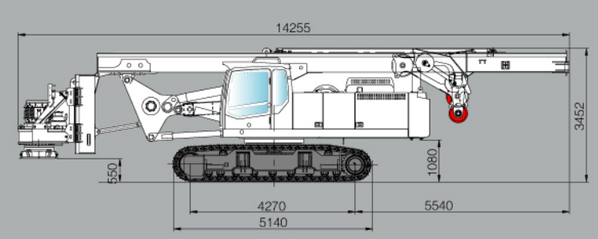

XR180D/Ⅱ 旋挖钻机主要技术参数

Main Technical Data of XR Series Multi-functional Combined Rotary Drilling Rig

主要技术参数 Main Technical Specification			
发动机 Engine	型号 Model		QSB6.7-C260
	额定功率 Rated Power	kW	194
动力头 Rotary Drive	最大输出扭矩 Max. output torque	kN・m	180
	转速 Rotary speed	r/min	7~27/6~33*
最大钻孔直径 Max. Drilling Diameter		mm	ϕ 1800/ ϕ 1600*
最大钻孔深度 Max. Drilling Depth		m	标配60(5节)，选配46m（机锁4节）
加压油缸 Pull-Down Cylinder	最大压力 Max. pull-down piston push	kN	160
	最大提升力 Max. pull-down piston pull	kN	180
	最大行程 Max. pull-down piston stroke	m	5
卷扬加压 Crowd Winch	最大加压力 Max. pull-down piston push	kN	210*
	最大提升力 Max. pull-down piston pull	kN	210*
	最大行程 Max. pull-down piston stroke	m	13000*
主卷扬 Main Winch	最大提升力 Max. Pulling force	kN	180
	最大单绳速度 Max. line speed	m/min	65
副卷扬 Auxiliary Winch	副卷扬提升力 Max. Pulling force	kN	50
	副卷扬最大单绳速度 Max. line speed	m/min	70
钻桅倾度 Mast Rake	侧向 / 前倾 / 后倾 Side/forwards/backwards		± 3° / 5° /15°
底　盘 Undercarrige	最大行走速度 Max. traveling speed	km/h	1.5
	整机最大爬坡度 Max. grade ability	%	35
	最小离地点间隙 Min. Clearance	mm	350
	履带板宽度 Track shoe width	mm	700
	履带外宽（最小-最大） Distance between tracks	mm	2960 ~ 4200
液压系统 Hydraulic System	工作压力 Working pressure	Mpa	35
整机工作质量 Overall Drilling Weight		t	58
外形尺寸 Dimension	工作状态 Working condition	mm	8350 × 4200 × 20480
	运输状态 Transportation condition	mm	14255 × 2960 × 3450

注：带“*”的参数为XR180D Ⅱ对应的技术参数

XR220D/Ⅱ 旋挖钻机
Rotary Drilling Rig

性能特点

采用单层绳主卷扬，有效解决钢丝绳磨损问题，提高钢丝绳使用寿命。

安装了红外摄像头，在驾驶室就能昼夜观察主卷钢丝绳使用情况。

可根据用户要求进行多种配置（如：支腿油缸，自动回转，卷扬加压系统），扩展性好。

选用进口康明斯电控涡轮增压发动机，满足欧Ⅲ排放标准，节能环保，动力强劲。

液压系统采用极限功率控制和正流量控制，使液压系统效率更高，更加节能。

拥有专利的平行四边形变幅机构，实现了大范围的工作区域，钻桅设计为高强材质的箱形结构，较高的强度与刚性，可有效保证钻孔精度。

整机通过德国莱茵公司欧盟CE认证。

标配集中润滑系统，维护保养更便捷。

Performance Characteristics

The machine adapt single row rope for main winch to figure out the wear of steel rope. and extend the life-span.

With infrared camera for observing main winch , Manipulator can observe the state of steel rope at day and night in cab.

Optional configuration according to customers' requirement (Eg: support cylinder , automatic positioning of slewing , Croed Winch tyro) Excellent expansibility.

Adopting the imported supercharged CUMMINS engine with European Ⅲ effluent standard. Meet environmental protection and energy conservation . Super power.

With the hydraulic pressure system adopted threshold power control and positive flow control, the system acquired high efficiency and higher energy conservation.

The patented parallelogram articulated structure actualizes a wider work range . The highly strengthened box-type steel structure design makes the mast of highly-rigidity and anticontored , therefore the drill accuracy is heightened .

The complete machine has passed CE certification of T ü V Rheinland group.

Standard centralized lubricating system, allowing easier maintenance.

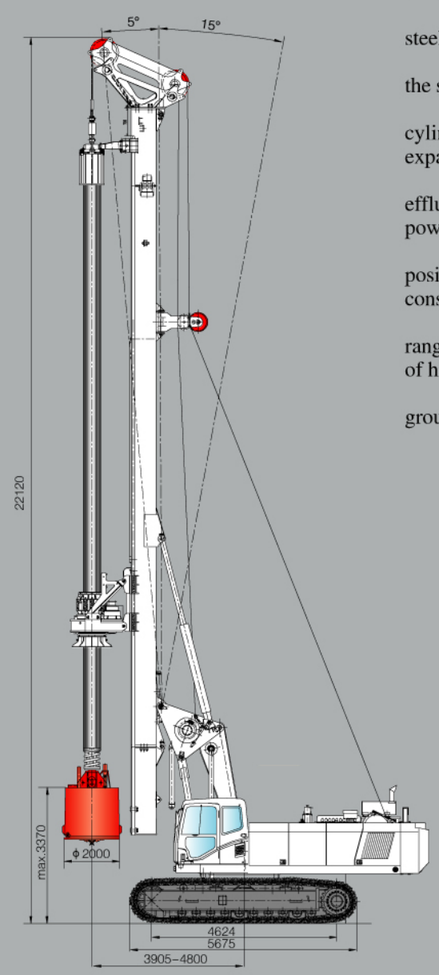

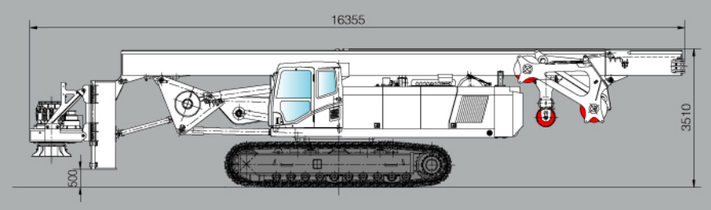

XR220D/Ⅱ 旋挖钻机主要技术参数

Main Technical Data of XR Series Multi-functional Combined Rotary Drilling Rig

主要技术参数 Main Technical Specification			
发动机 Engine	型号 Model		CUMMINS QSL-325
	额定功率 Rated Power	kW	242
动力头 Rotary Drive	最大输出扭矩 Max. output torque	kN・m	220
	转速 Rotary speed	r/min	7～22
最大钻孔直径 Max. Drilling Diameter		mm	ϕ2000
最大钻孔深度 Max. Drilling Depth		m	67，特配80
加压油缸 Pull-Down Cylinder	最大压力 Max. pull-down piston push	kN	200
	最大提升力 Max. pull-down piston pull	kN	200
	最大行程 Max. pull-down piston stroke	m	5
加压卷扬 Crowd Winch	最大加压力 Max. pull-down piston push	kN	250*
	最大提升力 Max. pull-down piston pull	kN	250*
	最大行程 Max. pull-down piston stroke	m	15*
主卷扬 Main Winch	最大提升力 Max. Pulling force	kN	230
	最大卷扬速度 Max. line speed	m/min	70
副卷扬 Auxiliary Winch	最大提升力 Max. Pulling force	kN	80
	最大卷扬速度 Max. line speed	m/min	60
钻桅倾度 Mast Rake	侧向 / 前倾 / 后倾 Side/forwards/backwards		± 4° / 5° / 15°
底　盘 Undercarrige	最大行走速度 Max. traveling speed	km/h	1.5
	最大爬坡度 Max. grade ability	%	35
	最小离地点间隙 Min. Clearance	mm	468/449*
	履带板宽度 Track shoe width	mm	800
	履带最大总宽 Distance between tracks	mm	3500～4400/3250~4400*
液压系统 Hydraulic System	工作压力 Working pressure	Mpa	35
整机工作质量 Overall Drilling Weight		t	70
外形尺寸 Dimension	工作状态 Working condition	mm	10260×4400×22120 10260×4400×22619*
	运输状态 Transportation condition	mm	16355×3500×3510 16355×3250×3510*

注：带“*”的参数为XR220D Ⅱ对应的技术参数

XR260D 旋挖钻机
Rotary Drilling Rig

性能特点

采用单排绳主卷扬，有效解决钢丝绳磨损问题，提高钢丝绳的使用寿命；

安装了红外线摄像头，在驾驶室就能昼夜观察主卷扬钢丝绳使用情况；

可根据用户要求进行多种配置（如：支腿油缸、自动回转），扩展性能好；

选用康明斯电控涡轮增压发动机，满足欧Ⅲ排放标准，节能环保，动力强劲；

液压系统采用极限功率控制和正流量控制，使得液压系统效率更高，更加节能；

拥有专利的平行四边形变幅机构，实现了大范围的工作区域，钻桅设计为高强度材质的箱型结构，较高的强度与刚性，可有效保证钻孔精度；

新型结构动力头，采用多级减震技术、双密封结构有效提高可靠性，可拆卸驱动套压板，方便维修；

智能控制系统，检测装置更加精准可靠；

可选配6节钻杆，最大钻深可达80米。

可选配集中润滑系统，维护保养更便捷。

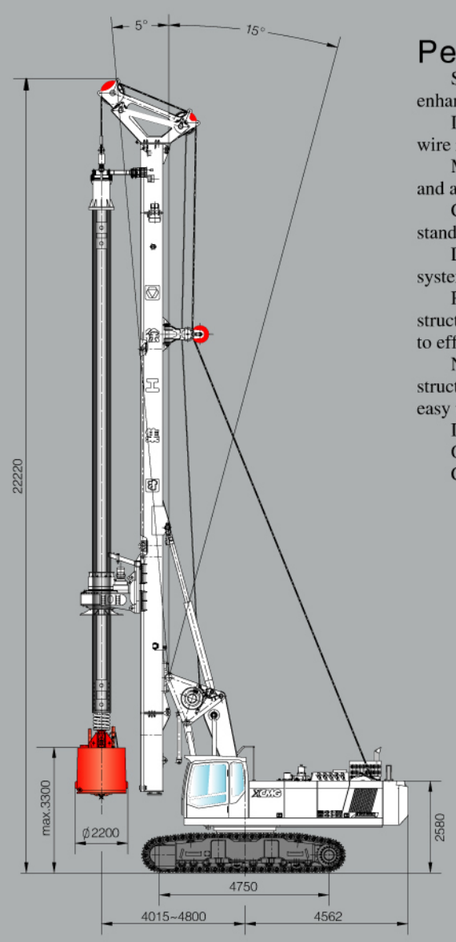

Performance Characteristics

Single-row rope main windlass, effectively eliminating the rope abrasion and enhancing the service life of rope;

Infrared camera allowing the driver to observe the service condition of main windlass wire rope in the cab in the day and night;

More configurations available upon customer's demand (such as the outrigger cylinder and auto slewing) to enable better expansibility;

Cummins electronic control turbo supercharged engine meeting Euro Ⅲ emission standard, saving energy, environmental protection and strong power;

Limit power control and positive flow control enabling higher efficiency of hydraulic system and more energy saving;

Patented parallelogram derricking mechanism, allowing wide range work area; box structure drilling mast made of high strength material enabling higher strength and rigidity to effectively guarantee the drilling accuracy;

New structure rotary employing multi-stage shock absorption technique and dual seal structure, effectively enhancing the reliability; the removable driving sleeve pressure plate easy to repair;

Intelligent control system enabling the detecting device more accurate and reliable;

Optional 6-section drill rod, allowing maximum drilling depth up to 80 m.

Centralized lubricating system is optional,allowing easier maintenance.

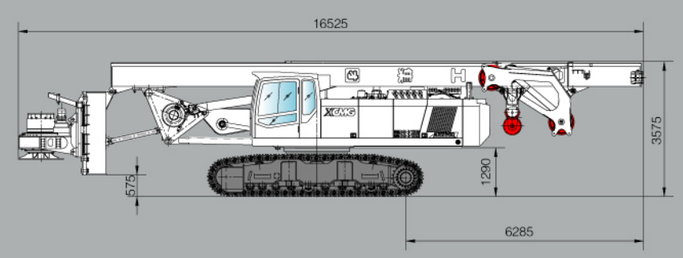

XR260D 旋挖钻机主要技术参数

Main Technical Data of XR Series Multi-functional Combined Rotary Drilling Rig

主要技术参数 Main Technical Specification			
发动机 Engine	型号 Model		CUMMINS QSL-325
	额定功率 Rated Power	kW	242
动力头 Rotary Drive	最大输出扭矩 Max. output torque	kN・m	260
	转速 Rotary speed	r/min	7～22
最大钻孔直径 Max. Drilling Diameter		mm	ϕ2200
最大钻孔深度 Max. Drilling Depth		m	80
加压油缸 Pull-Down Cylinder	最大压力 Max. pull-down piston push	kN	200
	最大提升力 Max. pull-down piston pull	kN	200
	最大行程 Max. pull-down piston stroke	m	5
主卷扬 Main Winch	最大提升力 Max. Pulling force	kN	260
	最大卷扬速度 Max. line speed	m/min	70
副卷扬 Auxiliary Winch	最大提升力 Max. Pulling force	kN	80
	最大卷扬速度 Max. line speed	m/min	60
钻桅倾度 Mast Rake	侧向 / 前倾 / 后倾 Side/forwards/backwards		± 4° / 5° / 15°
底　盘 Undercarrige	最大行走速度 Max. traveling speed	km/h	1.5
	最大爬坡度 Max. grade ability	%	35
	最小离地点间隙 Min. Clearance	mm	449
	履带板宽度 Track shoe width	mm	800
	履带最大总宽 Distance between tracks	mm	3250～4400
液压系统 Hydraulic System	工作压力 Working pressure	Mpa	35
整机工作质量 Overall Drilling Weight		t	79
外形尺寸 Dimension	工作状态 Working condition	mm	10465×4400×22220
	运输状态 Transportation condition	mm	16525×3250×3575

XR280D/Ⅱ 旋挖钻机
Rotary Drilling Rig

性能特点

采用旋挖钻机专用液压伸缩式履带底盘,满足超强的稳定性和运输的便捷性。采用进口康明斯涡轮增压发动机（欧Ⅲ排放阶段），动力强劲，足够的动力储备满足高原施工，噪音、排放达到国家标准。恒功率最佳动力输出，使整机处于最佳工作状态。

液压系统采用负荷传感技术，使液压系统效率更高，更节能。

拥有专利的平行四边形铰接机构实现了较大范围的工作区域，钻桅设计为高强度材质的箱形结构，较高的刚性与抗扭曲性，有效地保证了钻孔精度，各铰接均采用免润滑轴承，转动灵活自如。360° 上车回转任意角度排渣。

具有自主知识产权的智能控制系统，CAN总线和PLC控制系统的应用，包括钻桅垂直度自动/手动调整、深度自动检测显示、回转角度自动显示、智能故障诊断控制等。

采用单排绳主卷扬，有效解决钢丝绳磨损问题，提高钢丝绳使用寿命。

安装了观察主卷的红外摄像头，在驾驶室就能昼夜观察主卷钢丝绳使用情况。

标配集中润滑系统，维护保养更便捷。

整机通过德国莱茵公司欧盟CE认证。

Performance Characteristics

The special hydraulic chassis for the rotating drill with extensible crawler is provided with the excellent stability and is convenient to transport. The imported Cummins turbo–supercharged engine (meeting EU–Ⅲ standard) is powerful, and has sufficient power reserve, which can be operated in plateau. Its noise and emission meet the national standards. The constant power and the best output enable the complete machine to function at its best.

The load–sensing technique is used in the hydraulic system to make it more efficiently and save more energy.

The patented parallelogram articulation mechanism can work in a large area. The drill mast, which is designed in box structure and made of the materials with high strength, has good rigidity and anti–distortion, guaranteeing the drilling accuracy. The hinge is provided with the bearing exempt from lubrication, and can work freely. The slag can be discharged in any angle due to 360° lifting and revolving.

The intellectual controlling system, CAN bus and PLC with self–intellectual property right are used, including the automatic and manual regulation of the perpendicularity of the drill mast, automatic display of the drilling depth, automatic rotation positioning control, and intellectual fault diagnosis control.

The machine adapt single row rope for main winch to figure out the wear of steel rope. extend the life–span. And high reliability

With infrared camera for observing main winch , Manipulator can observe the state of steel rope at day and night in cab.

Standard centralized lubricating system, allowing easier maintenance.

The complete machine has passed CE certification of T ü V Rheinland group.

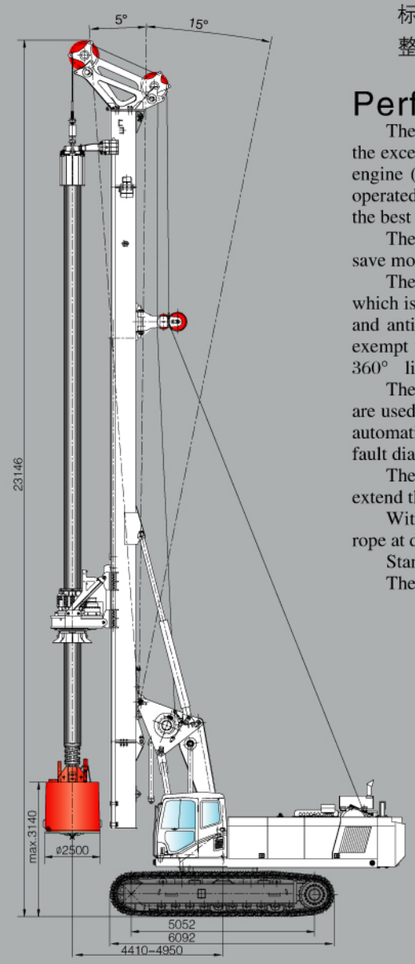

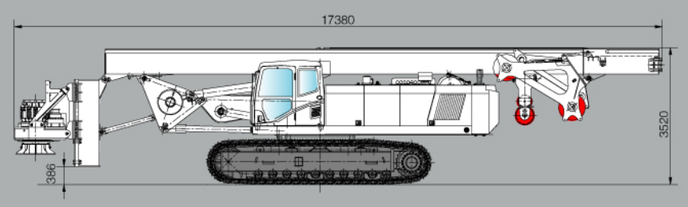

XR280D/Ⅱ 旋挖钻机主要技术参数

Main Technical Data of XR Series Multi–functional Combined Rotary Drilling Rig

主要技术参数 Main Technical Specification			
发动机 Engine	型号 Model		CUMMINS QSM11–C400
	额定功率 Rated Power	kW	298
动力头 Rotary Drive	最大输出扭矩 Max. output torque	kN・m	280
	转速 Rotary speed	r/min	7～22
最大钻孔直径 Max. Drilling Diameter		mm	ϕ2500/ϕ2200（卷扬加压）*
最大钻孔深度 Max. Drilling Depth		m	88
加压油缸 Pull–Down Cylinder	最大压力 Max. pull–down piston push	kN	210
	最大提升力 Max. pull–down piston pull	kN	220
	最大行程 Max. pull–down piston stroke	m	6
加压卷扬 Crowd Winch	最大加压力 Max. pull–down piston push	kN	250*
	最大提升力 Max. pull–down piston pull	kN	300*
	最大行程 Max. pull–down piston stroke	m	16*
主卷扬 Main Winch	最大提升力 Max. Pulling force	kN	260
	最大卷扬速度 Max. line speed	m/min	60
副卷扬 Auxiliary Winch	最大提升力 Max. Pulling force	kN	100
	最大卷扬速度 Max. line speed	m/min	65
钻桅倾度 Mast Rake	侧向 / 前倾 / 后倾 Side/forwards/backwards		±4° / 5° /15°
底　盘 Undercarrige	最大行走速度 Max. traveling speed	km/h	1.5
	最大爬坡度 Max. grade ability	%	35
	最小离地点间隙 Min. Clearance	mm	445
	履带板宽度 Track shoe width	mm	800
	履带最大总宽 Distance between tracks	mm	3500～4800
液压系统 Hydraulic System	工作压力 Working pressure	Mpa	32
整机工作质量 Overall Drilling Weight		t	88
外形尺寸 Dimension	工作状态 Working condition	mm	10770×4800×23146
	运输状态 Transportation condition	mm	17380×3500×3520

注：带“*”的参数为XR280D Ⅱ 对应的技术参数

XR320D 旋挖钻机
Rotary Drilling Rig

性能特点

专用液压伸缩式履带底盘，重型回转支承，整机稳定高；

采用大三角变幅机构，保证了在大孔深桩硬地层施工的稳定性；

前置单排绳主卷扬结构，钢丝绳寿命大大延长，使用成本更低；

进口的康明斯涡轮增压发动机拥有三档控制，用户可根据工况相应选择档位，实现一台钻机达到三台发动机的功效；

动力头拥有普通模式和入岩模式，分别针对土层和岩层作业，提高了施工效率；

可选卷扬加压、套管驱动功能，满足用户多种需求；

标配集中润滑系统，维护保养更便捷。

整机通过德国莱茵公司欧盟CE认证。

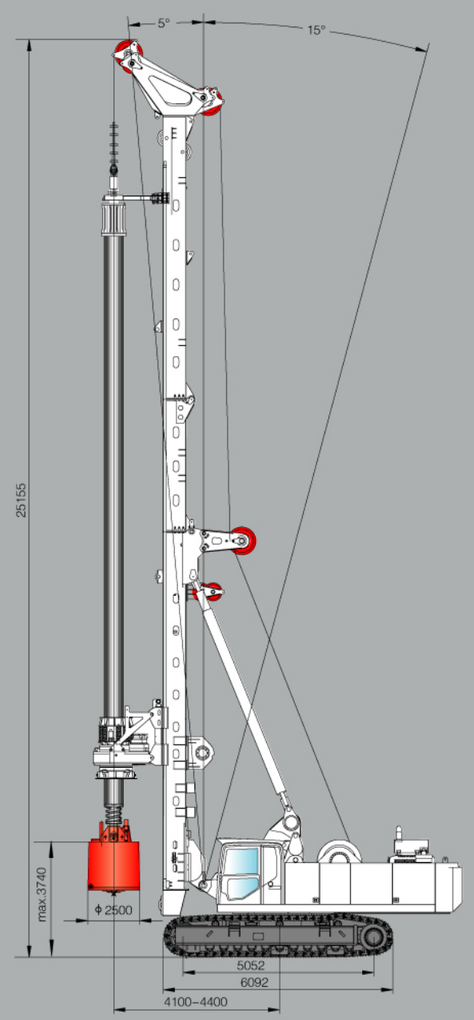

Performance Characteristics

It adopts dedicated hydraulic retractable crawler chassis and heavy slewing bearing and has high stability.

It adopts the luffing mechanism of large triangle form to ensure the stability of construction of big holes and deep piles in hard formation.

It adopts the front–located single–rope main winch structure to greatly prolong the service life of steel wire rope and lower the use cost.

According to specific working conditions, the users can select a corresponding gear of the imported Cummins turbo–supercharged engine with three gears, getting the drilling rig working as three engines.

Unit head can switch between Normal Mode and Rock Cracking Mode which are applicable for soil and rock excavation respectively, improving the efficiency.

Winch pressurization and sleeve drive are both available for selection to meet users' various demands.

It is equipped with a centralized lubrication system as standard configuration; maintenance is easier.

The complete machine has passed CE certification of T ü V Rheinland group.

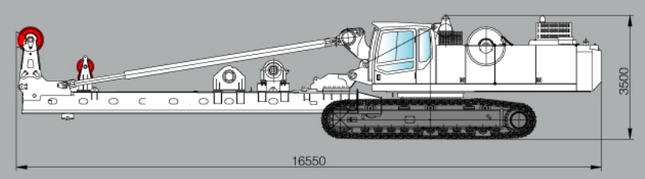

XR320D 旋挖钻机主要技术参数

Main Technical Data of XR Series Multi–functional Combined Rotary Drilling Rig

主要技术参数 Main Technical Specification			
发动机 Engine	型号 Model		CUMMINS QSM11–C400
	额定功率 Rated Power	kW	298
动力头 Rotary Drive	最大输出扭矩 Max. output torque	kN・m	320
	转速 Rotary speed	r/min	7～21
最大钻孔直径 Max. Drilling Diameter		mm	ϕ2500/ϕ2300（卷扬加压）
最大钻孔深度 Max. Drilling Depth		m	90
加压油缸 Pull–Down Cylinder	最大压力 Max. pull–down piston push	kN	250
	最大提升力 Max. pull–down piston pull	kN	250
	最大行程 Max. pull–down piston stroke	m	6.0
加压卷扬 Crowd Winch	最大加压力 Max. pull–down piston push	kN	330
	最大提升力 Max. pull–down piston pull	kN	350
	最大行程 Max. pull–down piston stroke	m	16
主卷扬 Main Winch	最大提升力 Max. Pulling force	kN	280
	最大卷扬速度 Max. line speed	m/min	75
副卷扬 Auxiliary Winch	最大提升力 Max. Pulling force	kN	100
	最大卷扬速度 Max. line speed	m/min	65
钻桅倾度 Mast Rake	侧向 / 前倾 / 后倾 Side/forwards/backwards		±4° / 5° /15°
底　盘 Undercarrige	最大行走速度 Max. traveling speed	km/h	1.5
	最大爬坡度 Max. grade ability	%	35
	最小离地点间隙 Min. Clearance	mm	445
	履带板宽度 Track shoe width	mm	800
	履带最大总宽 Distance between tracks	mm	3500～4800
液压系统 Hydraulic System	工作压力 Working pressure	Mpa	35
整机工作质量 Overall Drilling Weight		t	95
外形尺寸 Dimension	工作状态 Working condition	mm	10480×4800×25155
	运输状态 Transportation condition	mm	16550×3500×3500

XR360 旋挖钻机
Rotary Drilling Rig

性能特点

采用旋挖钻机专用液压伸缩式履带底盘,满足超强的稳定性和运输的便捷性。采用进口康明斯涡轮增压发动机（欧Ⅲ排放阶段），动力强劲,足够的动力储备满足高原施工,噪音、排放达到国家标准。恒功率最佳动力输出，使整机处于最佳工作状态。

主副液压系统均采用负荷传感技术，使液压系统效率更高，更节能；采用重载液压元件，满足旋挖钻机各种工况。

拥有专利的平行四边形铰接机构实现了较大范围的工作区域，钻桅设计为高强度材质的箱形结构，较高的刚性与抗扭曲性，有效地保证了钻孔精度，各铰接均采用免润滑轴承，转动灵活自如。360° 上车回转任意角度排渣。

具有自主知识产权的智能控制系统, CAN总线和PLC控制系统的应用，包括钻桅垂直度自动/手动调整、深度自动检测显示、回转角度自动显示、智能故障诊断控制等。

动力头采用三个减速机驱动，满足大扭转输出。

标配集中润滑系统，维护保养更便捷。

Performance Characteristics

The special hydraulic chassis for the rotating drill with extensible crawler is provided with the excellent stability and is convenient to transport. The imported Cummins turbo–supercharged engine (meeting EU–Ⅲ standard) is powerful, and has sufficient power reserve, which can be operated in plateau. Its noise and emission meet the national standards. The constant power and the best output enable the complete machine to function at its best.

The main and auxiliary hydraulic systems are all adopt the technique of load sensor, which can increase the efficiency of hydraulic system and save energy. It uses heavy load hydraulic units to satisfy the all kinds operating status of drill.

The patented parallelogram hinge mechanism enlarges the work area.

Independent intellectual property rights of the intelligent control system, the application of CAN bus and the PLC control system, including the automatic and manual adjustment of the perpendicularity of the drill mast, the automatic display of the drilling depth, rotary automatic positioning control and the intellectual fault diagnosis control.

Three speed reducers are used in the power head. It can output high torque. The drill mast, which is made of the materials with high strength, is designed to box structure. The higher rigidity and anti–distortion can ensure the drilling accuracy effectively. The hinge provided with the bearing exempt from lubrication can turn neatly. The slag can be discharged at any point of 360° rotation.

Standard centralized lubricating system, allowing easier maintenance.

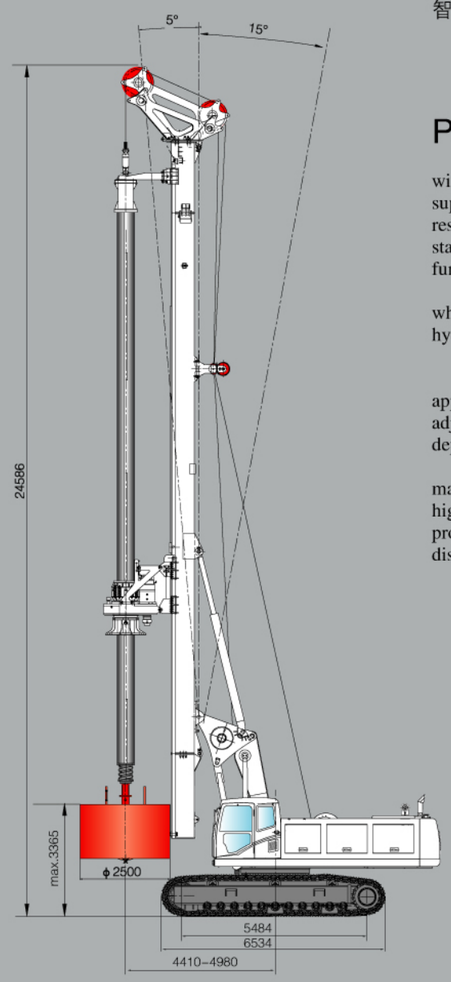

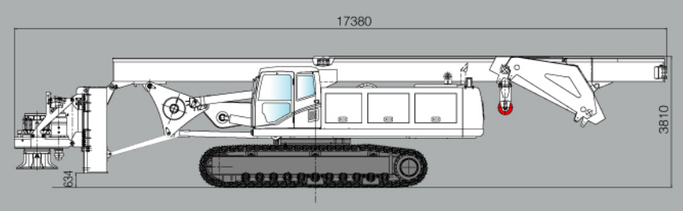

XR360 旋挖钻机主要技术参数
Main Technical Data of XR Series Multi–functional Combined Rotary Drilling Rig

主要技术参数 Main Technical Specification			
发动机 Engine	型号 Model		CUMMINS QSM11–C400
	额定功率 Rated Power	kW	298
动力头 Rotary Drive	最大输出扭矩 Max. output torque	kN・m	360
	转速 Rotary speed	r/min	7 ~ 20
最大钻孔直径 Max. Drilling Diameter		mm	ϕ2500
最大钻孔深度 Max. Drilling Depth		m	92，特配102
加压油缸 Pull–Down Cylinder	最大压力 Max. pull–down piston push	kN	240
	最大提升力 Max. pull–down piston pull	kN	250
	最大行程 Max. pull–down piston stroke	m	6.0
主卷扬 Main Winch	最大提升力 Max. Pulling force	kN	320
	最大卷扬速度 Max. line speed	m/min	72
副卷扬 Auxiliary Winch	最大提升力 Max. Pulling force	kN	100
	最大卷扬速度 Max. line speed	m/min	65
钻桅倾度 Mast Rake	侧向 / 前倾 / 后倾 Side/forwards/backwards		±4° / 5° /15°
底 盘 Undercarrige	最大行走速度 Max. traveling speed	km/h	1.5
	最大爬坡度 Max. grade ability	%	35
	最小离地点间隙 Min. Clearance	mm	445
	履带板宽度 Track shoe width	mm	800
	履带最大总宽 Distance between tracks	mm	3500 ~ 4800
液压系统 Hydraulic System	工作压力 Working pressure	Mpa	35
整机工作质量 Overall Drilling Weight		t	92
外形尺寸 Dimension	工作状态 Working condition	mm	11000 × 4800 × 24586
	运输状态 Transportation condition	mm	17380 × 3500 × 3810

XR400D 旋挖钻机
Rotary Drilling Rig

性能特点

专用液压伸缩式履带底盘，重型回转支承，整机稳定高；
采用大三角变幅机构，保证了在大孔深桩硬地层施工的稳定性；
前置单排绳主卷扬结构，钢丝绳寿命大大延长，使用成本更低；
进口康明斯发动机，动力强劲，足够的功率储备满足高原施工，噪音、排放满足欧Ⅲ标准；
采用CAN总线全电控技术，简化了液压管路、提高整车的可靠性，充分体现了人、机、液、电的一体化。
动力头拥有普通模式和入岩模式，分别针对土层和岩层作业，提高了施工效率；
可选卷扬加压、套管驱动功能，满足用户多种需求；
标配集中润滑系统，维护保养更便捷。

Performance Characteristics

It adopts dedicated hydraulic retractable crawler chassis and heavy slewing bearing and has high stability;

It adopts the luffing mechanism of large triangle form to ensure the stability of construction of big holes and deep piles in hard formation.

It adopts the front-located single-rope main winch structure to greatly prolong the service life of steel wire rope and lower the use cost.

Imported Cummins electric control turbo-supercharged engine is used. It complies with Euro III emission standard ,In addition, it has strong power, which is sufficient to satisfy the construction on the plateau. Its noise is up to the national standard.

Using full electronic control technogy of CAN bus,Improves the reliability of the whole vehicle and simplify hydraulic line,Fully reflects the people,machine,electricity and liquid integration.

Normal mode and entering-rock mode of unit head are available for operation in soil and rock to improve the construction efficiency;

Winch-pressurized and sleeve-driven functions are available for selection to satisfy various needs of the users;

It is equipped with a centralized lubrication system as standard configuration; maintenance is eas

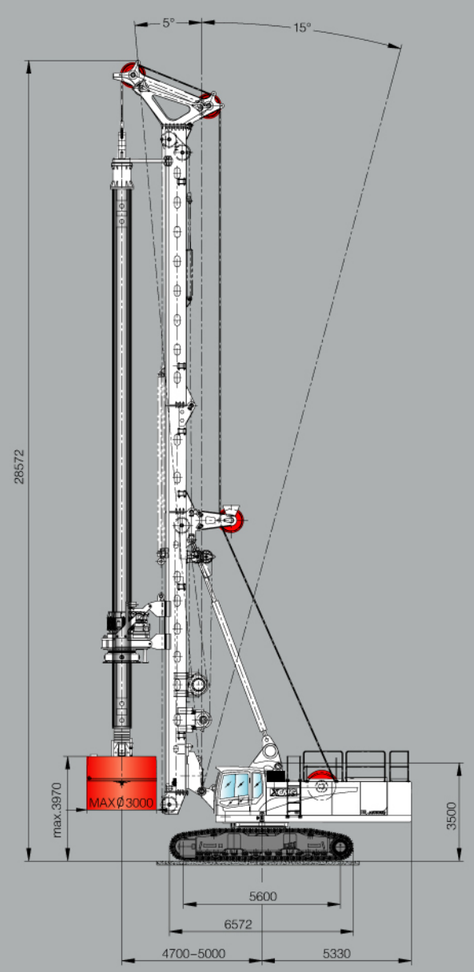

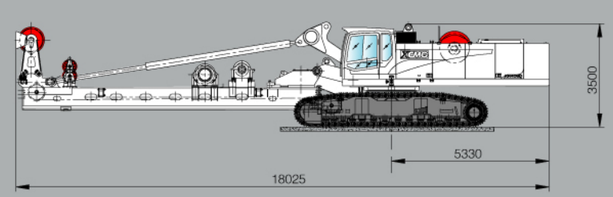

XR400D 旋挖钻机主要技术参数
Main Technical Data of XR Series Multi-functional Combined Rotary Drilling Rig

主要技术参数 Main Technical Specification			
发动机 Engine	型号 Model		QSX15-C500
	额定功率 Rated Power	kW	373
动力头 Rotary Drive	最大输出扭矩 Max. output torque	kN・m	400
	转速 Rotary speed	r/min	7～21
最大钻孔直径 Max. Drilling Diameter		mm	ϕ3000/ϕ2800（卷扬加压）
最大钻孔深度 Max. Drilling Depth		m	标配108(6节)，选配69m（机锁4节）
加压油缸 Pull-Down Cylinder	最大压力 Max. pull-down piston push	kN	300
	最大提升力 Max. pull-down piston pull	kN	400
	最大行程 Max. pull-down piston stroke	m	6
卷扬加压 Crowd Winch	最大加压力 Max. pull-down piston push	kN	300
	最大提升力 Max. pull-down piston pull	kN	400
	最大行程 Max. pull-down piston stroke	m	16
主卷扬 Main Winch	最大提升力 Max. Pulling force	kN	420
	最大单绳速度 Max. line speed	m/min	60
副卷扬 Auxiliary Winch	副卷扬提升力 Max. Pulling force	kN	100
	副卷扬最大单绳速度 Max. line speed	m/min	65
钻桅倾度 Mast Rake	侧向 / 前倾 / 后倾 Side/forwards/backwards		±5° / 5° /15°
底　盘 Undercarrige	最大行走速度 Max. traveling speed	km/h	1.3
	整机最大爬坡度 Max. grade ability	%	35
	最小离地点间隙 Min. Clearance	mm	450
	履带板宽度 Track shoe width	mm	900
	履带外宽（最小-最大） Distance between tracks	mm	3700～5100
液压系统 Hydraulic System	工作压力 Working pressure	Mpa	35
整机工作质量 Overall Drilling Weight		t	132
外形尺寸 Dimension	工作状态 Working condition	mm	10530×5100×28572
	运输状态 Transportation condition	mm	18025×3700×3500

XR460D 旋挖钻机
Rotary Drilling Rig

性能特点

采用旋挖钻机专用液压伸缩式履带底盘，满足超强的稳定性和运输的便捷性；

采用进口康明斯发动机，动力强劲，足够的功率储备满足高原施工，噪音、排放满足欧Ⅲ标准；

采用大三角变幅结构，具有超强的稳定性；

超大的钻桅截面，减低钻桅在施工时的晃动量，提高施工质量；

加装了钻杆托架，降低施工时钻杆晃动量，保证钻孔垂直度；

液压系统采用负荷传感技术，使液压系统效率更高，更节能；

可配置多种钻具，实现干湿两种钻孔作业，适用于多种地基的灌注桩钻孔工程。钻杆采用机锁式或摩阻式伸缩结构，通过牙嵌或摩擦板传递扭矩给钻具，传递扭矩大、效率高；

主卷扬钢丝绳采用单层缠绕，操作方便自如，大大的提高了钢丝绳的使用寿命。并在主卷扬上设有钻孔深度检测装置，单层绕绳使深度检测更准确、方便维修；

可选配卷扬加压，行程10米，卷扬加压最大加压力可达30吨；

动力头采用国际知名公司的进口减速机及马达，钻进扭矩大，工作效率高；

安装了观察主卷的红外摄像头，在驾驶室就能昼夜观察主卷钢丝绳使用情况。

标配集中润滑系统，维护保养更便捷。

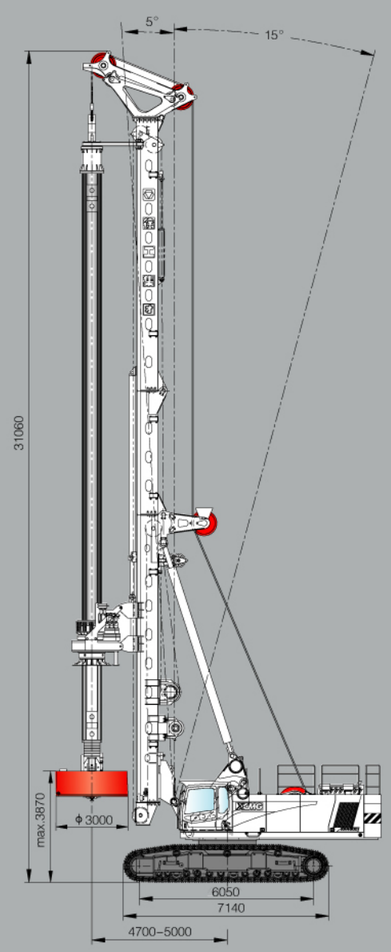

Performance Characteristics

Super stability and convenience of transportation, for use the special hydraulic and telescopic crawling chassis of rotary drilling rig.

The import Cummins engine provides strong power, and The noise and emission meet Europe Ⅲ standard.

The design of big trigonal luffing mechanism bring a significant improvement in stability.

The quality of work is enhanced by increase the mast section to reduce mechanical wobble of the mast.

Ensure verticality of the hole by add a bracket for drill pipe.

High–performance and more energy–efficient, due to the technology of load–sensing hydraulic system.

It can be equipped with a variety of drilling tools to realize drought and wet working.

The single winding roll of main winch enhance the life of rope and the precision of depth detection.

It can choose winch pull–dowm.The travel is 10 m, The Max. force of winch pull–down is 300kN.

Highly effective drilling torques, due to the robust drilling head, which choose the import motor and reducer manufactured by internationally renowned company.

The worker can observe the rope in cab day and night by infrared camera

Standard centralized lubricating system, allowing easier maintenance.

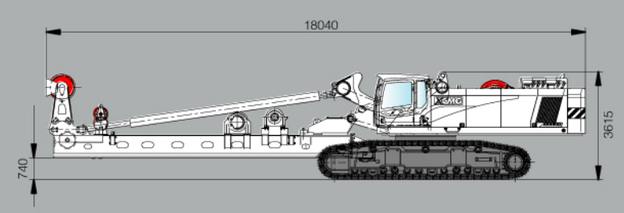

XR460D 旋挖钻机主要技术参数

Main Technical Data of XR Series Multi–functional Combined Rotary Drilling Rig

主要技术参数 Main Technical Specification			
发动机 Engine	型号 Model		QSX15–C600
	额定功率 Rated Power	kW	447
动力头 Rotary Drive	最大输出扭矩 Max. output torque	kN・m	460
	转速 Rotary speed	r/min	6～20
最大钻孔直径 Max. Drilling Diameter		mm	ϕ3500/ϕ2800（卷扬加压）
最大钻孔深度 Max. Drilling Depth		m	120
加压油缸 Pull–Down Cylinder	最大压力 Max. pull–down piston push	kN	300
	最大提升力 Max. pull–down piston pull	kN	400
	最大行程 Max. pull–down piston stroke	m	6.0
加压卷扬 Crowd winch	最大压力 Max. pull–down piston push	kN	300
	最大提升力 Max. pull–down piston pull	kN	400
	最大行程 Max. pull–down piston stroke	m	10
主卷扬 Main Winch	最大提升力 Max. Pulling force	kN	520
	最大卷扬速度 Max. line speed	m/min	60
副卷扬 Auxiliary Winch	最大提升力 Max. Pulling force	kN	100
	最大卷扬速度 Max. line speed	m/min	65
钻桅倾度 Mast Rake	侧向 / 前倾 / 后倾 Side/forwards/backwards		±5° / 5° /15°
底　盘 Undercarrige	最大行走速度 Max. traveling speed	km/h	1
	最大爬坡度 Max. grade ability	%	35
	最小离地点间隙 Min. Clearance	mm	500
	履带板宽度 Track shoe width	mm	1000
	履带最大总宽 Distance between tracks	mm	4050～5500
液压系统 Hydraulic System	工作压力 Working pressure	Mpa	33
整机工作质量 Overall Drilling Weight		t	158
外形尺寸 Dimension	工作状态 Working condition	mm	10750×5500×31060
	运输状态 Transportation condition	mm	18040×4050×3615

XR230C 旋挖钻机
Rotary Drilling Rig

性能特点

XR230C装备CAT336D底盘，具有超强稳定性。底盘结构强度高，采用重型液压可伸缩式履带，便于运输，行走性能优越。采用C9 STH 261KW@1800 RPM，EPA Tier III排放标准，满足欧洲、北美等国家排放要求。

油冷器和散热器并排置于中冷器后面，散热效果好，风扇由液压马达驱动，风扇速度由柱塞泵控制，风噪满足噪声控制要求。更加安静、环保。

液压主系统采用负流量控制，在此基础上叠加了总功率控制与极限功率控制，提高了系统效率，充分的利用发动机功率。辅系统采用了负载敏感控制系统。实现泵输出功率与各工况负荷的最佳匹配，实现了流量的按需供应，把系统的传动效率提高到极致。

动力头由一加压或起拔液压油缸系统操纵，安装有钻进液压马达，顶部弹簧减震器，顶开旋挖斗的法兰。配备有适宜摩擦式及内锁式钻杆的驱动套，带轴承的钻杆导向架。

应用先进的智能控制技术、CANBUS技术和虚拟仪表技术，采用高可靠性的控制器和彩色液晶显示器，显示器中文人机界面操作简便，易于观察，可直接显示桅杆垂直度及孔位深度，并自动实时检测显示记录，作业过程故障自动记录，输入/输出信号的在线调试与诊断以及钻桅限位、变幅限位、主副卷扬限位、过滤器报警、维修保养提示等各种报警信息。

标配集中润滑系统，维护保养更便捷。

Performance Characteristics

The CAT 336D chassis, is fixed on the XR220C. The chassis with high strength adopts the hydraulic telescopic caterpillar which is convenient for transport and with super function of travel. Adopts the C9STH 213Kw@1800 RPM, EPA Tire III engine, and meets the requirements of Europe and North America etc.

The oil cooler and the radiators are fixed side by side behind the mid cooler. The cooling effect is well. The fun is driven by hydraulic motor and the speed of the fun is controlled by plunger pump. The noise meets the requirement of noise control. It is much more quiet and protect environment.

The main hydraulic system adopts the negative flow control, and adopts the main power control and limit power control together which can increase the system efficiency and make the most of the engine power. The assistant system adopts the load sensitive control system. The power output can match the operating conditions well, that realize the flow can be supplied according to need and the efficiency of the driven system is increased to the highest point.

The rotary head is operated by a press or draw hydraulic cylinder. The drilling hydraulic motor, top spring absorber and the flange that used to open the bucket are all fixed on the rotary head. The drive case that fit to frictional or internal lock drill pipe and pilot bearing of drill pipe with bearing are equipped.

The intelligent control technique, CANBUS technique and the virtual technique are all applied on the machine. The machine adopts the controller with super reliability and the color liquid crystal display. The chinese man–machine interface in the display can be operated easily and easy for inspection. It can display the perpendicularity of the mast and the depth of the hole and it also can detect the display record, fault record, and the input/output signal of on–line debugging automatically. Also it can display all kinds of warning information such as the mast limit position, amplitude limit position and the main and the assistant winch limit position, the filter warning, and the prompt for the maintenance etc.

Standard centralized lubricating system, allowing easier maintenance.

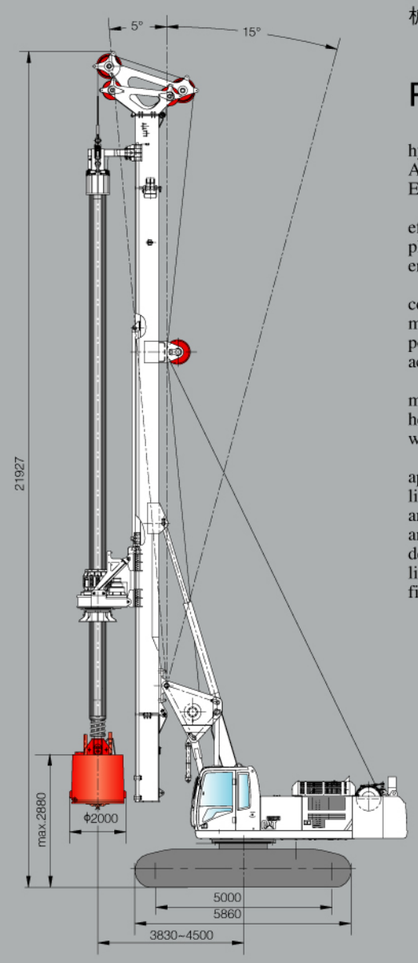

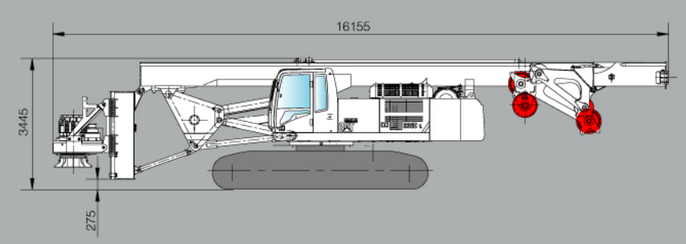

XR230C 旋挖钻机主要技术参数

Main Technical Data of XR Series Multi–functional Combined Rotary Drilling Rig

主要技术参数 Main Technical Specification			
发动机 Engine	型号 Model		CAT C9HHP
	额定功率 Rated Power	kW	261
动力头 Rotary Drive	最大输出扭矩 Max. output torque	kN・m	230
	转速 Rotary speed	r/min	7~23
最大钻孔直径 Max. Drilling Diameter		mm	ϕ2000/ϕ2200(特配钻杆+拆小钻桅)
最大钻孔深度 Max. Drilling Depth	钻孔直径ϕ2000mm Drilling Diameter	m	80
	钻孔直径ϕ2200mm(特配) Drilling Diameter		特配63(摩阻5节)
加压油缸 Pull–Down Cylinder	最大压力 Max. pull–down piston push	kN	200
	最大提升力 Max. pull–down piston pull	kN	200
	最大行程 Max. pull–down piston stroke	m	5.0
主卷扬 Main Winch	最大提升力 Max. Pulling force	kN	230
	最大卷扬速度 Max. line speed	m/min	65
副卷扬 Auxiliary Winch	最大提升力 Max. Pulling force	kN	80
	最大卷扬速度 Max. line speed	m/min	65
钻桅倾度 Mast Rake	侧向 / 前倾 / 后倾 Side/forwards/backwards		± 4° / 5° / 15°
底 盘 Undercarrige	最大行走速度 Max. traveling speed	km/h	2.1
	最大爬坡度 Max. grade ability	%	35
	最小离地点间隙 Min. Clearance	mm	395
	履带板宽度 Track shoe width	mm	800
	履带最大总宽 Distance between tracks	mm	3000 ~ 4300
液压系统 Hydraulic System	工作压力	Mpa	35
整机工作质量 Overall Drilling Weight		t	72
外形尺寸 Dimension	工作状态 Working condition	mm	8735 × 4300 × 21927
	运输状态 Transportation condition	mm	16155 × 3000 × 3445

XR280C 旋挖钻机
Rotary Drilling Rig

性能特点

XR280C装备CAT336D加长底盘，具有超强稳定性。底盘结构强度高，采用重型液压可伸缩式履带，便于运输，行走性能优越。采用(特制超大马力) C9 HHP 261KW@1800 RPM，EPA Tier III排放标准，满足欧洲、北美等国家排放要求。

油冷器和散热器并排置于中冷器后面，散热效果好，风扇由液压马达驱动，风扇速度由柱塞泵控制，风噪满足噪声控制要求。更加安静、环保。

主卷钢丝绳采用单层缠绕，操作方便自如，提高钢丝绳使用使命。

液压主系统采用负流量控制，在此基础上叠加了总功率控制与极限功率控制，提高了系统效率，充分的利用发动机功率。辅系统采用了负载敏感控制系统。实现泵输出功率与各工况负荷的最佳匹配，实现了流量的按需供应，把系统的传动效率提高到极致。

动力头由一加压或起拔液压油缸系统操纵，安装有钻进液压马达，顶部弹簧减震器，顶开旋挖斗的法兰。配备有适宜摩擦式及内锁式钻杆的驱动套，带轴承的钻杆导向架。

应用先进的智能控制技术、CANBUS技术和虚拟仪表技术，采用高可靠性的控制器和彩色液晶显示器，显示器中文人机界面操作简便，易于观察，可直接显示桅杆垂直度及孔位深度，并自动实时检测显示记录，作业过程故障自动记录，输入/输出信号的在线调试与诊断以及钻桅限位、变幅限位、主副卷扬限位、过滤器报警、维修保养提示等各种报警信息。

标配集中润滑系统，维护保养更便捷。

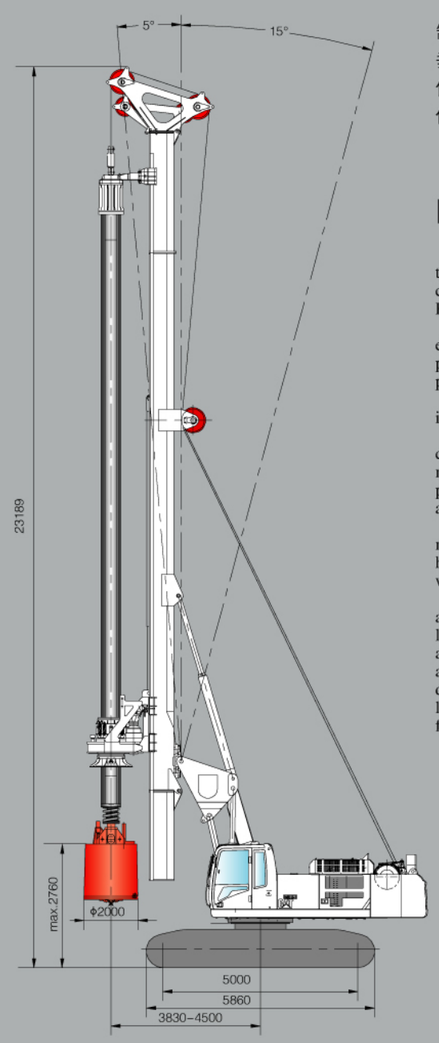

Performance Characteristics

The CAT 336D lengthen chassis, which has the characteristic of super stability, is fixed on the XR280C. The chassis with high strength adopts the hydraulic telescopic caterpillar which is convenient for transport and with super function of travel. Adopts the C9HHP 261Kw@1800 RPM, EPA Tire III engine, and meets the requirements of Europe and North America etc.

The oil cooler and the radiators are fixed side by side behind the mid cooler. The cooling effect is well. The fun is driven by hydraulic motor and the speed of the fun is controlled by plunger pump. The noise meets the requirement of noise control. It is much more quiet and protect environment.

The wire rope of the main winch is wind single layer. The operation is convenient and it has increases the service life.

The main hydraulic system adopts the negative flow control, and adopts the main power control and limit power control together which can increase the system efficiency and make the most of the engine power. The assistant system adopts the load sensitive control system. The power output can match the operating conditions well, that realize the flow can be supplied according to need and the efficiency of the driven system is increased to the highest point.

The rotary head is operated by a press or draw hydraulic cylinder. The drilling hydraulic motor, top spring absorber and the flange that used to open the bucket are all fixed on the rotary head. The drive case that fit to frictional or internal lock drill pipe and pilot bearing of drill pipe with bearing are equipped.

The intelligent control technique, CANBUS technique and the virtual technique are all applied on the machine. The machine adopts the controller with super reliability and the color liquid crystal display. The chinese man–machine interface in the display can be operated easily and easy for inspection. It can display the perpendicularity of the mast and the depth of the hole and it also can detect the display record, fault record, and the input/output signal of on–line debugging automatically. Also it can display all kinds of warning information such as the mast limit position, amplitude limit position and the main and the assistant winch limit position, the filter warning, and the prompt for the maintenance etc.

Standard centralized lubricating system, allowing easier maintenance.

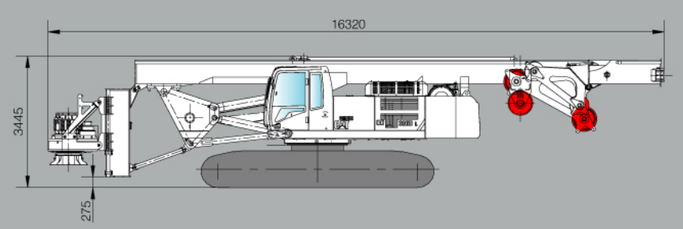

XR280C 旋挖钻机主要技术参数
Main Technical Data of XR Series Multi–functional Combined Rotary Drilling Rig

主要技术参数 Main Technical Specification			
发动机 Engine	型号 Model		CAT C9HHP
	额定功率 Rated Power	kW	261
动力头 Rotary Drive	最大输出扭矩 Max. output torque	kN・m	280
	转速 Rotary speed	r/min	7~22
最大钻孔直径 Max. Drilling Diameter		mm	ϕ2000/ϕ2500(特配钻杆+拆小钻桅)
最大钻孔深度 Max. Drilling Depth	钻孔直径ϕ2000mm Drilling Diameter	m	88
	钻孔直径ϕ2500mm(特配) Drilling Diameter	m	特配64(摩阻5节)
加压油缸 Pull–Down Cylinder	最大压力 Max. pull–down piston push	kN	210
	最大提升力 Max. pull–down piston pull	kN	220
	最大行程 Max. pull–down piston stroke	m	6.0
主卷扬 Main Winch	最大提升力 Max. Pulling force	kN	270
	最大卷扬速度 Max. line speed	m/min	60
副卷扬 Auxiliary Winch	最大提升力 Max. Pulling force	kN	80
	最大卷扬速度 Max. line speed	m/min	65
钻桅倾度 Mast Rake	侧向 / 前倾 / 后倾 Side/forwards/backwards		± 4° / 5° / 15°
底　盘 Undercarrige	最大行走速度 Max. traveling speed	km/h	2.1
	最大爬坡度 Max. grade ability	%	35
	最小离地点间隙 Min. Clearance	mm	395
	履带板宽度 Track shoe width	mm	800
	履带最大总宽 Distance between tracks	mm	3000 ~ 4300
液压系统 Hydraulic System	主泵压力 working pressure of the main pump	Mpa	35
	副泵压力 working pressure of the vice pump	Mpa	28
	先导压力 Pilot pressure	Mpa	4
整机工作质量 Overall Drilling Weight		t	76
外形尺寸 Dimension	工作状态 Working condition	mm	8735 × 4300 × 23189
	运输状态 Transportation condition	mm	16320 × 3000 × 3445

XRS680 旋挖钻机
Rotary Drilling Rig

性能特点

产品性能较同等机型有较大提升，标准配置钻深可达68m。

采用单排绳主卷扬，有效解决钢丝绳磨损问题，且钢丝绳直径为30mm,破断拉力有较大提高，提高钢丝绳使用寿命，用绳量省，安全性高。

使用潍柴电喷发动机，采用自动怠速、极限功率控制，节省燃油，且维护保养方便、费用较低，满足国内外市场对废气排放的要求。

安装了观察主卷的红外摄像头，在驾驶室就能昼夜观察主卷钢丝绳使用情况。

采用挖掘机驾驶室，外形更美观，操作更舒适。

可根据用户要求进行多种配置（如：支腿油缸，自动回转），扩展性好。

标配集中润滑系统，维护保养更便捷。

Performance Characteristics

Compared the same model , the product performance have a big promotion. The drilling depth is up to 68m for standard configuration.

The machine adapt single row rope for main winch to figure out the wear of steel rope. And the diameter of steel rope is 30 mm. the min. breaking force advance and extend the life-span. And high reliability

WEICHAI electric spray engine. Automatic idle speed , threshold power control. Fuel-saving . convenient maintain, economic benefit . Meet the demand of exhaust emission at home and abroad.

With infrared camera for observing main winch , Manipulator can observe the state of steel rope at day and night in cab.

The machine adapts excavators' cab, fashion appearance, comfortable operation.

Optional configuration according to customers' requirement (eg : support cylinder , automatic positioning of slewing.) Excellent expansibility.

Standard centralized lubricating system, allowing easier maintenance.

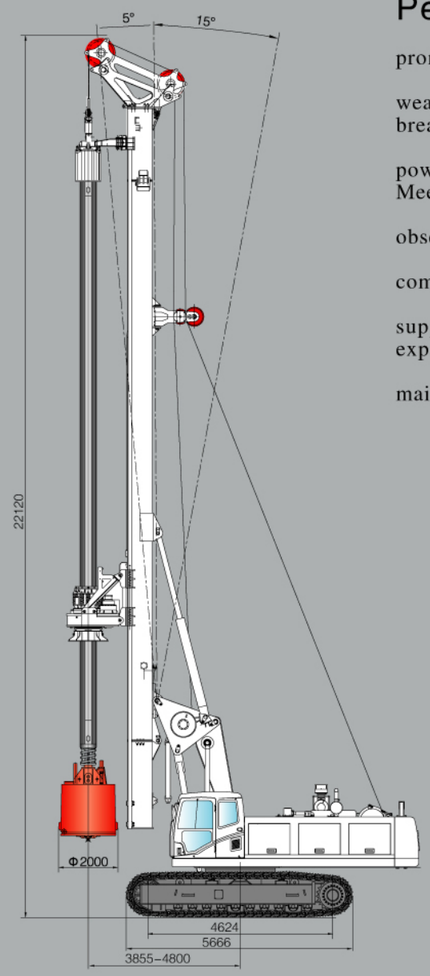

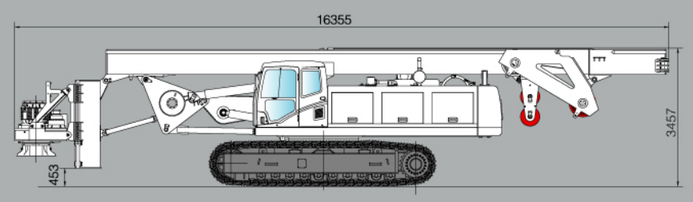

XRS680 旋挖钻机主要技术参数

Main Technical Data of XR Series Multi-functional Combined Rotary Drilling Rig

主要技术参数 Main Technical Specification			
发动机 Engine	型号 Model		WP10.290
	额定功率 Rated Power	kW	213
动力头 Rotary Drive	最大输出扭矩 Max. output torque	kN・m	200
	转速 Rotary speed	r/min	7～26
最大钻孔直径 Max. Drilling Diameter		mm	ϕ2000
最大钻孔深度 Max. Drilling Depth		m	68
加压油缸 Pull-Down Cylinder	最大压力 Max. pull-down piston push	kN	200
	最大提升力 Max. pull-down piston pull	kN	200
	最大行程 Max. pull-down piston stroke	m	5
主卷扬 Main Winch	最大提升力 Max. Pulling force	kN	190
	最大卷扬速度 Max. line speed	m/min	65
副卷扬 Auxiliary Winch	最大提升力 Max. Pulling force	kN	80
	最大卷扬速度 Max. line speed	m/min	60
钻桅倾度 Mast Rake	侧向 / 前倾 / 后倾 Side/forwards/backwards		±4° / 5° / 15°
底　盘 Undercarrige	最大行走速度 Max. traveling speed	km/h	1.5
	最大爬坡度 Max. grade ability	%	35
	最小离地点间隙 Min. Clearance	mm	468
	履带板宽度 Track shoe width	mm	800
	履带最大总宽 Distance between tracks	mm	3500～4400
液压系统 Hydraulic System	工作压力 Working pressure	Mpa	35
整机工作质量 Overall Drilling Weight		t	70
外形尺寸 Dimension	工作状态 Working condition	mm	10260×4400×22120
	运输状态 Transportation condition	mm	16355×3500×3457

XRS1050 旋挖钻机
Rotary Drilling Rig

性能特点

采用旋挖钻机专用液压伸缩式履带底盘，满足超强的稳定性和运输的便捷性；

采用进口康明斯发动机，动力强劲，足够的功率储备满足高原施工，噪音、排放满足欧Ⅲ标准；

采用大三角变幅结构，具有超强的稳定性；

超大的钻桅截面，减低钻桅在施工时的晃动量，提高施工质量；

加装了钻杆托架，降低施工时钻杆晃动量，保证钻孔垂直度；

液压系统采用负荷传感技术，使液压系统效率更高，更节能；

可配置多种钻具，实现干湿两种钻孔作业，适用于多种地基的灌注桩钻孔工程。钻杆采用机锁式或摩阻式伸缩结构，通过牙嵌或摩擦板传递扭矩给钻具，传递扭矩大、效率高；

主卷扬钢丝绳采用单层缠绕，操作方便自如，大大的提高了钢丝绳的使用寿命。并在主卷扬上设有钻孔深度检测装置，单层绕绳使深度检测更准确、方便维修；

可选装运输拆卸支腿，方便拆开运输；

动力头采用国际知名公司的进口减速机及马达，钻进扭矩大，工作效率高；

安装了观察主卷的红外摄像头，在驾驶室就能昼夜观察主卷钢丝绳使用情况。

标配集中润滑系统，维护保养更便捷。

Performance Characteristics

Super stability and convenience of transportation, for use the special hydraulic and telescopic crawling chassis of rotary drilling rig.

The import Cummins engine provides strong power, and The noise and emission meet Europe Ⅲ standard.

The design of big trigonal luffing mechanism bring a significant improvement in stability.

The quality of work is enhanced by increase the mast section to reduce mechanical wobble of the mast.

Ensure verticality of the hole by add a bracket for drill pipe.

High–performance and more energy–efficient, due to the technology of load–sensing hydraulic system.

It can be equipped with a variety of drilling tools to realize drought and wet working.

The single winding roll of main winch enhance the life of rope and the precision of depth detection.

It is convenience for transport since add a disassembly structure.

Highly effective drilling torques, due to the robust drilling head, which choose the import motor and reducer manufactured by internationally renowned company.

The worker can observe the rope in cab day and night by infrared camera

Standard centralized lubricating system, allowing easier maintenance.

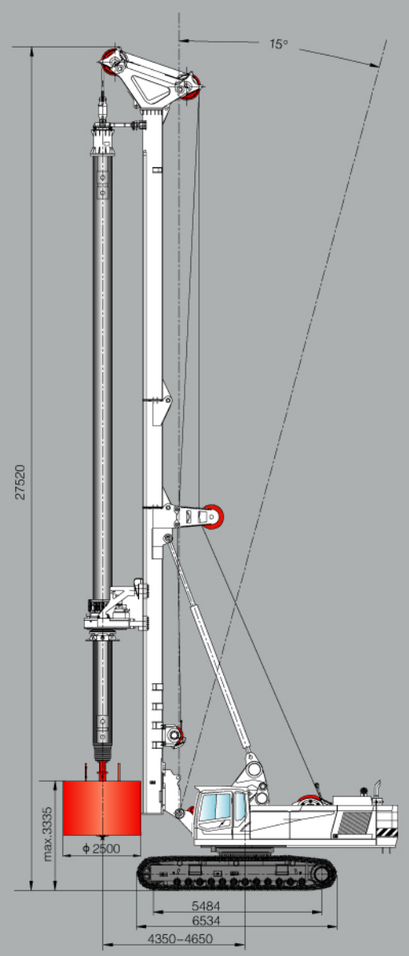

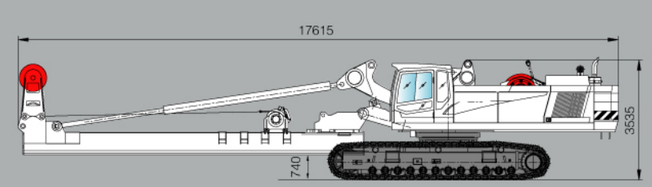

XRS1050 旋挖钻机主要技术参数

Main Technical Data of XR Series Multi–functional Combined Rotary Drilling Rig

主要技术参数 Main Technical Specification			
发动机 Engine	型号 Model		CUMMINS QSM11–C400
	额定功率 Rated Power	kW	298
动力头 Rotary Drive	最大输出扭矩 Max. output torque	kN・m	390
	转速 Rotary speed	r/min	7～18
最大钻孔直径 Max. Drilling Diameter		mm	ϕ2500
最大钻孔深度 Max. Drilling Depth		m	105
加压油缸 Pull–Down Cylinder	最大压力 Max. pull–down piston push	kN	240
	最大提升力 Max. pull–down piston pull	kN	250
	最大行程 Max. pull–down piston stroke	m	6.0
主卷扬 Main Winch	最大提升力 Max. Pulling force	kN	400
	最大卷扬速度 Max. line speed	m/min	60
副卷扬 Auxiliary Winch	最大提升力 Max. Pulling force	kN	100
	最大卷扬速度 Max. line speed	m/min	65
钻桅倾度 Mast Rake	侧向 / 前倾 / 后倾 Side/forwards/backwards		±4° / 5° /15°
底　盘 Undercarrige	最大行走速度 Max. traveling speed	km/h	1.2
	最大爬坡度 Max. grade ability	%	35
	最小离地点间隙 Min. Clearance	mm	445
	履带板宽度 Track shoe width	mm	800
	履带最大总宽 Distance between tracks	mm	3500～4800
液压系统 Hydraulic System	工作压力 Working pressure	Mpa	35
整机工作质量 Overall Drilling Weight		t	114
外形尺寸 Dimension	工作状态 Working condition	mm	10265×4800×27520
	运输状态 Transportation condition	mm	17615×3500×3535

技术特点 Technical Features

XR系列旋挖钻机是徐工集团多年专业从事桩工机械研发的结果，它广泛地吸收国内外先进技术，并依托强大的工程机械制造实力生产制造，品质优秀，可靠性高，适应于我国大部分地区地层条件。

XR Series Rotary Drilling Rig stands for our company's achievement in many years' development and researches on piling machine, adopting the advanced technology, both at home and abroad. With our company's powerful machinery manufacturing capacity, it is specially designed to drill the pile hole with the big diameter and into hard-layers, fitting for layer conditions in most areas. XR series is an ideal equipment widely applied in piling constructions, featuring reasonable design, compact structure, convenient operation, high reliability, powerful performance and wide application.

底 盘 ▌Retractable Undercarrige

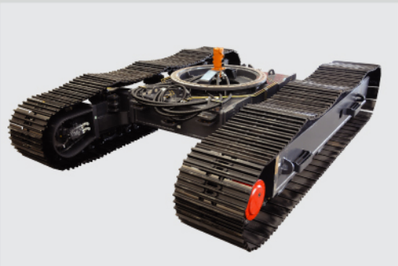

使用先进的设计方法设计制造的伸缩式履带底盘，质量高，强度大，能同时满足工作稳定性及运输方便性的要求。

With telescopic crawler undercarriage, it meets high stability and easy transportation. Adopting the imported Cummins turbine-charged engine, make it competent for operating on plateau.Noise emission meets with the national standard. Constant power output assures an excellent working performance.

动力头 ▌Rotary Drive

独特的回转支承传动机构，输出扭矩大，使用寿命长，工作效率高。动力头上下都具有减震弹簧，能有效保护动力头。

XR Series is featured with unique slewing bearings double reducer transmission mechanism, powerful output torque, spinning off up to 130 rpm. Particular lubrication system guarantees the lubrication and radiation so as to extend rotary table's service life.

工作装置 ▌Working Devices

拥有专利的平行四边形变幅机构实现了大范围的工作区域。钻桅设计为高强度材质的箱形结构，较高的强度与刚性，有效的保证了钻孔精度。各铰接均采用免润滑轴承，转动灵活自如。

The patented parallelogram articulated structure actualizes a wider work range. The highly strengthened box-type steel structure design makes the mast of highly-rigidity and anticontorted, therefore the drill accuracy is heightened. The lubrication-free bearings are equipped in the flexible articulation joints. So the regular maintenance is unnecessary. Upper structure can slew with 360 degree, and discharge slag at random angle.

重要元件国际化配套 ▌Internationalized Configuration

液压元件采用国际化配套，质量可靠，货源充足，备件易得。

The main parts are imported from international manufacturers: Rexroth A8V0 constant power series with double pumps,motor,pilot proportional control valve,reducer,imported controller,which guarantees its reliability.

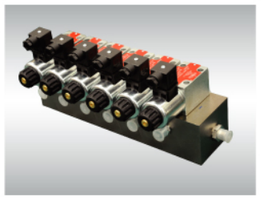




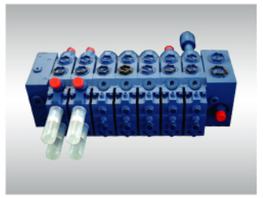
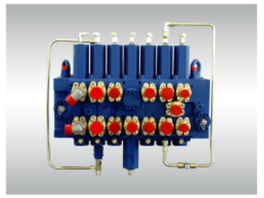

技术特点 Technical Features

主、辅卷扬 ▌Main and Auxiliary winch

主卷扬具有“自由下放”功能，保证钻头钻进速度与卷扬钢丝绳同步，操作方便自如。

The main winch is provided with a freefall hydraulic system for automatic follow during the drill operation.

回转机构 ▌Rotating Mechanism

回转机构采用进口元件，超大回转支承及自动复位机构，做到操作省时、省力。回转平台可360° 回转，实现任意角度排渣。

Adoption the imported component, large back-up bearing as well as the auto-reposition mechanism make the operation easy and save the time. The rotary table rotates 360 degree to release scrap at any angle.

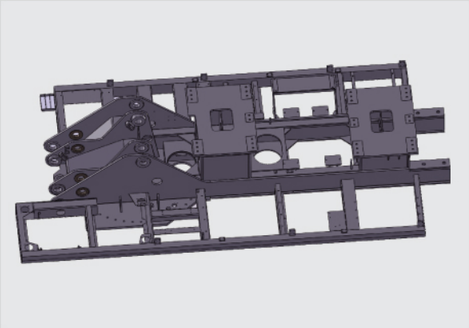

发动机 ▌Engine

搭载着知名品牌之动力，轻松操作便能达到动力之颠峰。采用高压直喷式蜗轮增压，使功率和燃油达到最佳平衡。大功率输出和高效液压系统的完美组合，保障了强劲扭矩。

Equipped with world famous engine,with high efficiency by easy operation. The turbocharged, direct injection engine maximize the power at a optimum fuel consumption. The combination of the high horsepower and the potent hydraulic system guarantees the powerful torque output.

控制系统 ▌Control System

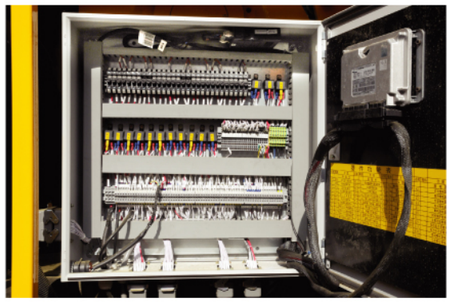

PLC 控制器实现钻桅垂直度自动/手动调整、自动检测各关键点压力与报警，适时检测钻孔深度、动态及数码显示；钻桅自动 / 手动起落，系统操作简便灵活。

大屏幕彩色显示器界面为根据钻机多年实际工作经验设计，页面设置与实际操作相符合，使用方便。

PLC control system realizes the automatic/self verticality for the mast.XR Series has automatic pressure inspection and alarm, depth inspection of the drill hole, dynamic and digital display, mast automatic/self erecting and falling, easy and simple in system operation.

钻杆及钻具 Kelly bar and Drilling tool

钻杆为伸缩式结构，其功能是将扭矩和给进加压力传递给下端的钻具，以完成灌注桩成孔作业。徐工使用的钻杆均采用高强合金钢管，内外键条均采用高强耐磨材料，以保证钻进施工中的效率，并且寿命长，可靠性高。

1）、摩阻式钻杆

摩阻式钻杆适用于普通土层钻进，在较软的地层钻进效率高。内外层键条易脱锁，钻杆提升比较简便。一般由5节钻杆组成，钻孔深度一般较深。摩阻式钻杆靠键条之间的摩擦力进行向下施压，加压力较小，不适宜用于硬地层的钻进。

2）、机锁式钻杆

机锁式钻杆靠内外层键条加压面向下施压，加压力大，适用于硬地层钻进。钻杆一般不超过4节，钻孔深度在80米以内。机锁式钻杆在提升钻杆前，必须使内外键条脱锁后再提升钻杆，脱锁比较复杂。

可配置适合于各种工况的钻杆、钻具，满足不同用户的各项要求。

机锁式钻杆　　摩阻式钻杆

适用于砂土、淤泥、粘土、亚粘土等第四纪地层

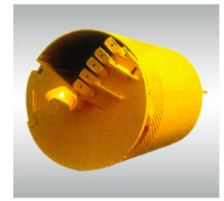

双底单开门土层钻斗

双底双开门土层钻斗

大直径双底双开门捞砂斗

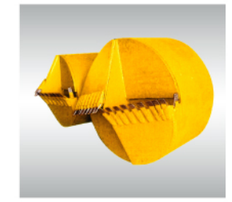

单层土层钻斗

适用于中风化岩石、冻土层、卵石层、强风化泥岩、砂岩、页岩等硬质土层

双开门截齿捞砂斗

单开门截齿捞砂斗

适用于粘土、淤泥地层等

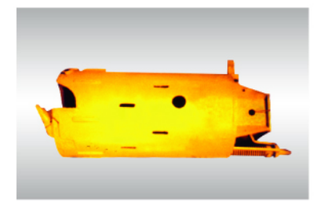

半合式粘土钻斗

适用于风化基岩、永冻土层及卵砾石层

单头钻岩短螺旋钻头

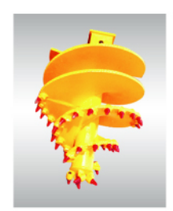

单头锥螺钻岩短螺旋钻头

双头钻岩短螺旋钻头

适用于地下水位以上土层、砂土层、致密砾石层等

土层短螺旋钻头

双头土层短螺旋钻头

适用于硬度较大的基岩地层、漂石地层、硬质永冻土层等

截齿筒钻

牙轮筒钻

适用于土层、硬质基岩、冻土层等桩底扩孔，提高灌注桩的承载力

扩底钻头

XRS1050在武汉施工

XRS1050在武汉施工

施工范例
Construction Cases

XR280D湖北施工

徐工旋挖钻连续墙新疆施工

京沪线工地

兰新铁路施工

郑州高架桥施工现场

施工范例 Construction Cases

南宁徐工旋挖钻机群施工

山西徐工旋挖钻机群施工

成都机群施工

SRS1050重庆施工

西安浐灞新区施工

XR220D银川施工

XR360襄阳施工

施工范例 Construction Cases

昆明施工


泉州徐工旋挖钻机群施工


XR150D内蒙施工


合肥绕城高铁施工


XR280D贵阳施工


XRS1050武汉施工


XR280D南京市政施工


XR360甘肃施工


XR280D东莞施工