EJGZHENXE2000G.00 || -A1

XE2000 液压挖掘机（反铲）
技术规格书
XE2000 Hydraulic Excavator（Backhoe）
Technical Specification

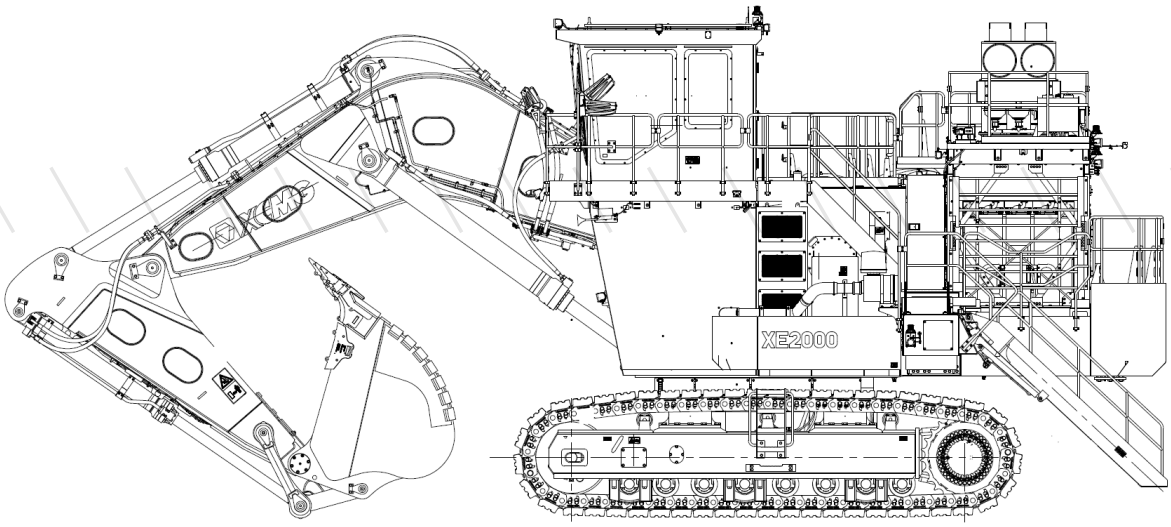

徐州徐工矿业机械有限公司

XUZHOU XCMG MINING MACHINERY CO.,LTD

2024 年 7 月

July 2024

徐州

Xuzhou City

目录

Contents

一、总体概述 - 1 -

Ⅰ. General Overview - 1 -

二、 设备亮点及特点 - 1 -

Ⅱ. Equipment Highlights and Features - 1 -

（一）高效回报 - 1 -

（Ⅰ）High efficiency and return - 1 -

（二） 高可靠性 - 2 -

（Ⅱ）High reliability - 2 -

（三） 舒适安全 - 2 -

（Ⅲ）Amenity and safety - 2 -

（四） 高维保性 - 3 -

（Ⅳ）High maintainability - 3 -

（五） 智能管控 - 3 -

（Ⅴ）Intelligent Control - 3 -

三、 产品关键配置情况 - 4 -

Ⅲ. Product Key Configuration - 4 -

（一）动力系统 Dynamical system - 5 -

（二）电控系统 Electronic control system - 5 -

（三）液压系统 Hydraulic system - 6 -

（四）人机工程和智能诊断系统 Ergonomics and intelligent diagnostic systems - 7 -

（五）工作装置 Working device ..... - 9 -

（六）平台与底盘系统 Platform and chassis system ..... - 10 -

（七）人机工程 Man-machine engineering ..... - 11 -

（八）运输与安装 Transportation and installation ..... - 12 -

Transportation is simple and convenient. The whole machine adopts the modular design, each function system and the component all can conveniently assemble and disassemble independently, the transfer field movement is simple and convenient. ..... - 13 -

四、 产品主要技术参数 ..... - 13 -

Ⅳ. Main Technical Parameter of Product ..... - 13 -

五、 产品标配、选配清单 ..... - 19 -

Ⅴ. Product Standard, Optional Components List ..... - 19 -

XE2000 液压挖掘机（反铲）标配、选配清单 ..... - 19 -

XE2000 Hydraulic Excavator（Backhoe）Standard, Optional Components List ..... - 19 -

六、 声明 ..... - 21 -

Ⅵ.Declaration ..... - 21 -

XE2000 液压挖掘机（反铲）技术规格书

XE2000 Hydraulic Excavator（Backhoe）Technical Specification

一、总体概述

Ⅰ. General Overview

XE2000 液压挖掘机是徐工自主创新研发的新一代 200 吨级柴油机驱动型全液压反铲型矿用挖掘机，具有多项自主知识产权。可满足多种矿山施工工况，整机性能达到国际先进、国内领先水平。该超大型液压挖掘机的设计研发，集科技化、智能化、人性化为一身。

XE2000 Hydraulic Shovel is a new generation of diesel-driven full hydraulic backhoe mining excavator developed by XCMG, having a number of independent intellectual property rights. It can meet a variety of mine construction conditions, and its performance has reached the international advanced and domestic leading level. The design and development of the super large hydraulic excavator is a combination of technology, intelligence and humanization.

XE2000 液压挖掘机整机重量约 195 吨，发动机功率 783KW。反铲可配置斗容 12 立方米。单斗掘起重量达 21 吨，铲斗最大挖掘力达 702KN、斗杆最大挖掘力 628KN。主要应用于大型露天矿山的剥离和采装，具有卓越的作业能力。

The XE2000 Hydraulic Shovel weighs about 195 tons with a motor power of 783kW. Its bucket capacity is 12 m3, the lifting weight of the single bucket reaches 21 tons, the maximum stacking force of bucket rod is 702kN, and the maximum breakout force of bucket is 628kN. It is mainly used in stripping and loading of large-scale open-pit mines, and has an excellent operational capacity.

二、设备亮点及特点

Ⅱ. Equipment Highlights and Features

（一）高效回报

(Ⅰ) High efficiency and return

原装进口康明斯发动机，配合高品质原装进口液压元件，采用先进可靠的正流量控制系统，为设备提供更强大的挖掘能力，保证高效率作业。与同级别产品对比拥有更大的挖掘力，更能够适应复杂的矿山工矿，为客户提供更高的回报。

The original imported Cummins engine adopts high-quality imported hydraulic components with advanced and reliable positive flow control system to provide more powerful mining capacity for equipment and ensure efficient operation. Compared with other products at same level, it is more capable to adapt to complex mines condition, and provides customers with higher returns.

（二）高可靠性

(II) High reliability

底盘、回转平台、工作装置等关键大型重载结构件采用抗疲劳设计，通过残余应力与工作应力耦合疲劳仿真，实现疲劳寿命预测与结构优化，提高大型结构件的疲劳寿命和可靠性。发动机、泵、阀、减速机等关键零部件采用全球高端配套，保证了整机的可靠性，满足用户对设备高出勤率要求。

Chassis, rotary platform, working device and other key large heavy load structural parts adopt anti-fatigue design. Coupling the residual stress and working stress with fatigue simulation, the fatigue life prediction and structure optimization are realized, and the fatigue life and reliability of large structural parts are improved. Pump, valve, reducer and other key parts are equipped with global high-end supporting ensure the reliability of the whole machine and meet the requirements of users for high equipment utilization.

（三）舒适安全

(III) Amenity and safety

超大型、全视野、双座椅、带有下仓的增高型驾驶室，配置全自动、大功率的冷暖空调系统，标配空气增压系统，多点支撑的硅油减震系统，可为驾驶员提供舒适、宽敞的工作环境，减少驾驶员的操作疲劳。驾驶室经过 FOPS 认证，采用夹胶玻璃，提高操作者的

安全性。

The super-large full vision cab with double seats and lower cabin is equipped with fully automatic high-power air conditioning system and air pressurization system. The multi-point supporting silicone oil shock absorption system can provide the driver with a comfortable and spacious working environment to reduce the operating fatigue. The cab is certified by FOPS and equipped with laminated glass to improve operator safety.

（四）高维保性

(Ⅳ) High maintainability

合理方便的通道设计，满足设备维修需求。双上车通道，冗余设计，保证用户方便上下车。标配发动机废气排尘隐射装置，可满足 30 小时的超大型柴油箱，标配自动润滑，有效减少维保时间。

The product adopts reasonable and convenient channel design, which can meet the equipment maintenance requirements. It is equipped with double access and redundant design to ensure the convenience of users to get on and off the bus. It is standard with automatic lubrication, which can effectively reduce the maintenance time.

（五）智能管控

(Ⅴ) Intelligent Control

先进的 XEICS 徐工矿机智能管理系统，采用 CAN 总线通讯和物联网技术，集主控制系统、发动机 ECM、监控系统、操控面板、GPS 云控系统和现场诊断系统于一体，实现机器信息数字化共享，提高产品智能化水平。

The product has an advanced XEICS excavator intelligent management system of XCMG, which adopts CAN bus communication and Internet of things technology. It integrates the main control system, monitoring system, control panel, GPS cloud control system and field diagnosis system into a whole, which can realize the digital sharing of machine information and improve the intelligent level of product.

三、产品关键配置情况

III. Product Key Configuration

XE2000 液压挖掘机（反铲）关键部件配置一览表

XE2000 Hydraulic Excavator（Backhoe）Key Component Configuration Table

部件 ***Units***		***品牌*** ***Brands***	***国家*** ***Countries***
动力系统 Dynamical system	发动机 Engine	康明斯 Cummins	美国 USA
	散热器 Radiator	东洋 TOYO	日本 Japan
液压系统 Hydraulic system	主泵 Main pump	川崎 Kawasaki	日本 Japan
	主阀 Main valve	KYB	日本 Japan
	回转马达 Rotary motor	川崎 Kawasaki	日本 Japan
	回转减速机 Rotary reducer	南高齿 Nangaochi	中国 China
	行走马达 Walking motor	川崎 Kawasaki	日本 Japan
	行走减速机 Travel reducer	采埃孚 ZF	德国 Germany
	液压油缸 Hydraulic cylinder	徐工 XCMG	中国 China
四轮一带 Four wheel and one crawler	四轮一带 Four wheel and one crawler	徐工 XCMG	中国 China

（一）动力系统 Dynamical system

采用国际一流品牌的康明斯 QST30 发动机，水冷、十二缸、双涡轮增压,低能耗，高效率，低噪音。

Cummins QST30 engine, equipped with water-cooled, 12-cylinder, twin-turbocharged engine, has the characteristics of low energy consumption, high efficiency and low noise.

空滤器由国际知名的唐纳森公司配套，散热器由日本东洋公司配套；消声器采用国内配套件；系统装有易于更换的机油滤清器，油水分离器等。

The air filter is supplied by the internationally renowned Donaldson Company, and the radiator is supplied by Toyo Company. The muffler adopts domestic accessories; The system is equipped with easily replaceable oil filter and oil-water separator, etc.

发动机安装采用弹性联接，简单、方便，减少了应力产生及振动影响。散热器结构形式为串联（水、中冷散），冷却空气从散热器正前方吸入，风流通畅，流速快，散热效果好。空滤器为二次过滤型，防止粉尘进入，以适应多灰尘环境作业。

The engine is installed with elastic connection, which is simple and convenient, reducing the stress and vibration influence. The radiator structure is in series (water, cooling and dispersing), the cooling air is inhaled from the front of the radiator, the air flow is unobstructed, the flow rate is fast, the heat dissipation effect is good. The air filter is a secondary filter, which can prevent dust from entering and adapt to the operation in dusty environment.

（二）电控系统 Electronic control system

车辆操作和控制使用电控正流量系统，车辆电气系统包括发动机控制系统、泵阀控制系统和监控系统等。主要元件如电控系统、监控器由力士乐、威卡配套。电气系统除完成动力控制、照明、信号处理等基本功能外，还与液压系统、执行器件等配合，实现整车的动作控制和作业模式选择。同时为了实现挖掘机节能、高效的要求，电气控制系统还配有监控元件，对机器的工作状态进行实时监测，数据处理、安全保护等。

Vehicle operation and control using an electronically controlled positive flow system. Vehicle electrical system includes motor control system, pump valve control system and monitoring system. Electronic control system, monitor and other main components by Rexroth, WIKA electronics Co., LTD. In addition to power control, lighting, signal processing and other basic functions, the electrical system can also cooperate with the hydraulic system, actuator, etc., so as to realize the motion control and operation mode selection of the vehicle. At the same time, in order to realize the energy saving and efficient requirements of excavator, the electrical control system is also equipped with monitoring components, which can carry out real-time monitoring, data processing and safety protection of the working state of the machine.

（三）液压系统 Hydraulic system

多项创新的先进液压系统，更高的作业效率、更舒适的操作安全性。

The product adopts a number of innovative advanced hydraulic system, with higher operating efficiency, more comfortable operation safety.

XE2000 液压挖掘机采用国际先进的液压技术，具备多项技术，整机作业效率更高，运转更加平稳；既能保证作业的舒适性和安全性，又能降低油耗，节能环保。

XE2000 hydraulic excavator adopts international advanced hydraulic technology and has multipletechnologies, which makes the whole machine work more efficiently and run more smoothly. It can not only ensure the comfort and safety of operation, but also reduce fuel consumption, realize energy saving and environmental protection.

多泵复合控制,实现了复合操作时的流量最佳分配，使操作性更协调、作业效率更高。独立冷却系统，发动机、液压油冷却都采用独立的液压回路控制，电控变量液压泵根据冷却对象的实际温度实时调节冷却功率，使发动机、液压油处于理想的工作温度，实现节能环保；液压油冷却自动控制系统根据液压系统的温度变化，自动调节冷却系统的冷却风量，以保证系统的最佳工作状态。

The compound control of multi-pump realizes the optimal flow distribution during the

compound operation, which makes the operation more coordinated and the operation efficiency higher. It is equipped with an independent cooling system. Both the engine and the hydraulic oil are controlled by an independent hydraulic loop. The electrically controlled variable hydraulic pump can adjust the cooling power in real time according to the actual temperature of the cooling object, so that the engine and the hydraulic oil can be in an ideal working temperature and realize energy saving and environmental protection. The hydraulic oil cooling automatic control system can automatically adjust the cooling air flow of the cooling system according to the temperature change of the hydraulic system, so as to ensure the optimal working state of the system.

带有压力反馈控制的液压涨紧装置，带压力反馈的液压涨紧技术，当设备工作时，液压系统利用行走回路油压对履带进行张紧控制，大容量的蓄能器吸收行走作业时车体造成的冲击，内置的压力反馈回路检测当冲击力大于设定限制时行走将自动停止。

Hydraulic taming device with pressure feedback control. The product adopts hydraulic tensioning technology with pressure feedback. When the equipment is working, the hydraulic system USES the oil pressure of the walking loop to conduct tensioning control on the track. The accumulator with large capacity can absorb the impact caused by the vehicle body during the walking operation. Built-in pressure feedback loop detection when the impact force is greater than the set limit, the walk will automatically stop.

（四）人机工程和智能诊断系统 Ergonomics and intelligent diagnostic systems

独具特色的人机交互和智能诊断系统，保证出色的效率、稳定、节能。

The unique human-computer interaction and intelligent diagnosis system can ensure excellent efficiency, stability and energy saving.

1.先进的 XEICS 控制诊断系统，可对设备综合使用工状态进行监控;

The advanced XEICS control and diagnosis system can comprehensively monitor the labor status of the equipment;

2.更高的可靠性和耐用性，全车线束采用模块化设计，连接器件防护标准满足 IEC IP67 防护等级;

It has higher reliability and durability. The whole vehicle wiring harness adopts modular design, and the protection standard of connecting devices meets IEC IP67 protection level;

3.新型智能电控系统、高效节能功率监控模式、液压油冷却自动控制系统、新型自动怠速系统、智能化故障诊断系统和全面升级的电子监控系统，保证动力系统、液压系统最佳工作状态。设备设定两种功率模式，可以根据不同的作业负荷选择最佳的功率模式，使挖掘机在各种工况下都能高效工作，大大降低了油耗；

New intelligent electronic control system, high-efficiency and energy-saving power monitoring mode, hydraulic oil cooling automatic control system, intelligent fault diagnosis system and comprehensively upgraded electronic monitoring system can ensure the optimal working state of the power system and hydraulic system. Two power modes are set in the equipment, so the best power mode can be selected according to different operating loads, so that the excavator can work efficiently in various working conditions;

4.多点视频监控，保证整机作业的舒适性、安全性；

Multi-point video monitoring can ensure the comfort and safety of the whole machine;

5.新型节能控制策略，先导阀在中位时，根据转速及时间，自动判断，分级降速，主控制器信号实现电动机效能利用的最大化；

The equipment adopts the new energy-saving control strategy. When the pilot valve is in the middle position, it can automatically judge and step down the speed according to the speed and time, and the main controller signal can realize the maximum utilization of the motor efficiency;

6.故障报警诊断系统利用 GPS 定位和 GPRS 通讯功能，实现远程服务，及时了解机器运行状态，向用户传达机器保养和维修的服务信息；可实现同时诊断电气、液压等故障，以文字及故障代码形式显示在彩色液晶显示屏上，驾驶员可以准确的了解机器状态，方便及时判断排除故障。

The fault alarm and diagnosis system adopts GPR positioning and GPRS communication

functions to realize remote service, timely keep up with the running state of the machine, convey the service information of machine maintenance and repair to users; It can diagnose electrical and hydraulic faults simultaneously, and display them in the form of text and fault code on the color LCD screen, so that the driver can accurately acquire machine state, judge and eliminate faults in time.

（五）工作装置 Working device

坚固高效，持久耐用。

The equipment is strong, efficient and durable.

1.铲斗：采用世界知名公司的合金铸造耐磨斗齿，在硬度与冲击韧性之间达到了最佳平衡；独特的外形设计保证斗齿巧妙的架构设计，使斗齿更换更加便捷，大幅提高了可维护性；更强的穿透能力降低了系统负荷，胜任最苛刻的作业工况；关键部位由高强度钢板焊合而成，高强度、高耐磨性、高效率。

Bucket: It adopts the wear-resistant bucket teeth made of alloy from world-renowned companies to achieve the best balance between hardness and impact toughness. Its unique shape design can ensure the ingenious structure design of bucket teeth, and make the replacement of bucket teeth more convenient, greatly improve the maintainability; Greater penetration reduces system load and enablesit adaptable to the most demanding operating conditions; The key parts are welded by high-strength steel plates with high strength, abrasive resistance and efficiency.

2.斗杆：主体采用箱型结构设计，端部为高强度铸件，所有转轴均配有高承载耐磨材料的衬套，并带有润滑油槽，可满足恶劣工况的要求。通过有限元分析，优化箱型结构，减轻了重量，提高了结构强度及工作可靠性。

Stick: The main body is designed with box structure and the end is high strength casting. All shafts are equipped with bushing of high bearing wear resistant material and lubricated with oil groove to meet the requirements of harsh working conditions. Through finite element analysis, the optimization of box structure can be realized, the weight is reduced, and the strength and

working reliability of the structure are improved.

3.动臂：主体采用箱型设计和端部采用铸造件，所有转轴配有由耐磨材料组成的衬套并带有润滑磨损保护装置、油缸被定位在受到良好保护的位置。以满足全部采矿作业环境的要求而进行的高可靠性和强壮的钢结构设计。

Boom: The main body is designed with box structure and the end is high strength casting. All shafts are equipped with bushing of high bearing wear resistant material and lubricated with oil groove. The cylinder is positioned in a well protected position to meet the requirements of the full mining operation environment for high reliability and strong steel structure design.

（六）平台与底盘系统 Platform and chassis system

1.平台：上车架的中平台采用重载型双筑梁箱式结构，提高了回转平台刚性。加强型的下车架——采用新型结构设计，提高了下车架的结构强度，增强了在重载条件下的耐冲击能力，工作可靠性大幅提高。

Platform: The middle platform of the upper frame adopts heavy load double beam box structure, which improves the rigidity of the revolving platform. The reinforced underframe adopts new structural design, which improves its structural strength, enhances its impact resistance under heavy load, and greatly improves its working reliability.

2.组合式底盘系统：可靠耐久的履带底盘系统由世界知名公司专业定制的履带和轮体，保证了行走系统的高可靠性和耐久性，合金钢锻造支承座圈，延长了使用寿命。

Combined chassis system: reliable and durable crawler chassis system. The track and wheel body are specially customized by world-renowned companies, which guarantee the high reliability and durability of the walking system. The supporting seat ring of alloy steel forging extends its service life.

3.可靠的轨链防护装置：可防止履带轨链和支重轮损坏、变形，还能防止因石块进入而引起的下部行走体过载，从而减小磨损和损坏。

Reliable rail chain protection device: it can prevent damage and deformation of track rail

chain and support wheel, and also prevent overload of lower walking body caused by stone entry, so as to reduce wear and damage.

4.回转支承采用大规格三排滚柱式回转支撑，轴向和径向承载能力更强，回转更平顺。

The slewing support adopts large size three-row roller slewing support, with stronger axial and radial bearing capacity and smoother slewing.

（七）人机工程 Man-machine engineering

操作舒适安全，便捷的维护保养。

Comfortable and safe operation and convenient maintenance.

1.配备超大型、全视野、双座椅，具有 FOPS 功能的安全可靠的专用驾驶室；全屏视野超大玻璃前窗，左右两侧和后部分别开窗，确保宽阔视野，全方位开放的操作空间。

The product is equipped with a super large, full view, double seats and FOPS functional safe and reliable dedicated cab; It is equipped with large glass front Windows with full screen visual field, and Windows on the left and right sides and the back respectively, ensuring wide visual field and all-directional open operating space.

2.配置全自动、大功率的冷暖空调系统，为驾驶员提供一个更舒适的操作环境。

It is equipped with a fully automatic and high-power air conditioning system to provide a more comfortable operating environment for drivers.

3.多点支撑的减震器能有效的减震降噪，可为驾驶员提供舒适、宽敞的工作环境，减少驾驶员的操作疲劳。

Multi-point support shock absorber can effectively reduce shock and noise, and can provide a comfortable and spacious working environment for drivers, thus reducing their operating fatigue.

4.各开关、手柄布局合理、可靠、方便；副座椅、储物箱、空调回风窗层叠放置，布局紧凑，节省空间。

The layout of switches and handles is reasonable, reliable and convenient; Auxiliary seats, storage boxes, air conditioning return Windows and other facilities stacked, with compact

layout and space saving characteristics.

5.采用集中润滑系统，液压驱动、PLC 控制的自动润滑系统，可为工作装置所有的销轴和回转支承提供定时、定量的润滑，同时可为履带涨紧油缸加注油脂。自动化程度高，效率高，极大地降低了劳动强度。

It adopts centralized lubrication system, hydraulic drive, PLC controlled automatic lubrication system, can provide timing, quantitative lubrication for all the pin shaft and rotary support of the working device, at the same time can be filled with grease for the tracked tensioning oil cylinder. It has a high degree of automation and efficiency, greatly reducing the labor intensity.

6.耐磨性强，延长保养周期，衬套设计采用专利技术的“油穴式”衬套，表面渗碳淬火处理，具有很高的强度和高耐磨性，布置的“油穴”可以大幅提升销轴润滑效果。

The product has strong wear resistance and can extend the maintenance cycle. The liner design adopts the patented technology of "oil hole" bushing, and the surface is carburized and quenched, which has high strength and high wear resistance. The "oil hole" arrangement can greatly improve the pin shaft lubrication effect.

7.通道相连，液压系统、电气系统等各功能区的维护点均有通道相连，各通道配有灯光照明，动力舱内部宽敞，设有维修通道，与外部有多门相通，出入方便，使维护保养和检修更便捷。

Channels are connected. The maintenance points of hydraulic system, electrical system and other functional areas are connected by channels. Each passageway is equipped with lighting, the power cabin is spacious and equipped with maintenance passageway. It is connected with many doors outside to make access convenient, which makes maintenance and overhaul more convenient.

（八）运输与安装 Transportation and installation

运输简单方便，整机采用模块化设计，各功能系统与部件均能够方便的独立装配和拆卸，转场运输简单方便。

Transportation is simple and convenient. The whole machine adopts the modular design, each function system and the component all can conveniently assemble and disassemble independently, the transfer field movement is simple and convenient.

四、产品主要技术参数

Ⅳ. Main Technical Parameter of Product

XE2000 液压挖掘机（反铲）主要技术参数表

XE2000 Hydraulic Excavator（Backhoe）Main Technical Parameter Table

名称 ***Name***		*单位* ***Unit***	*参数* ***Parameter***
操作重量 Operating weight		kg	195000
斗容 Bucket capacity		m3	12
动臂长度 Boom length		mm	8300
斗杆长度 Bucket rod length		mm	3600
发动机 Engine	发动机型号 Engine type	/	Cummins QST30
	直喷 Direct injection	/	√
	4冲程 Four stroke	/	√
	水冷 Water cooling	/	√
	涡轮增压 Turbo charger	/	√

	低温中冷LTA Low temperature cold	/	√
	缸数 Number of cylinders	/	12
	发动机输出功率 Engine output	kW/rpm	783/1800
	最大扭矩/转速 Maximum torque/rotational speed	N·m	4629/1300
	排量 Displacement	L	30.5
主要性能 Main performance	行走速度 Walking velocity	km/h	2.7/1.9
	回转速度 Rotating speed	r/min	4.7
	爬坡能力 Gradeability	°	30
	接地比压 Grounding pressure	kPa	186
	最大斗杆挖掘力 Maximum thrust-pressure	kN	628
	最大铲斗挖掘力 Maximum breakout force	kN	702
	最大牵引力 Maximum tractive force	kN	1014
液压系统 Hydraulic system	主泵 Main pump	液压系统 Hydraulic system	6个柱塞泵 6 piston pumps
	主泵额定流量 Rated flow of main pump	L/min	6×335

	主安全阀压力 Main relief valve pressure	MPa	29.4/31.4
	行走系统压力 Running system pressure	MPa	29.4
	回转系统压力 Rotary system pressure	MPa	29.4
	先导系统压力 Pilot system pressure	MPa	4.4
油类容量 Fuel capacity	燃油箱容积 Fuel tank capacity	L	3700
	液压油箱容积 Hydraulic oil tank capacity	L	1300
	发动机机油容量 Engine oil capacity	L	133
外形尺寸 Overall dimension	A 总长 A overall length	mm	16895
	B 总宽 B overall width	mm	7370
	C 总高 C overall height	mm	7320
	D 转台宽度 D Steering width	mm	5600
	E 履带长度 E Track length	mm	7440
	F 底盘总宽 F Chassis width	mm	5755
	G 履带宽度 G Crawler width	mm	800

	H 履带轴距 H Distance between tracks	mm	5775
	I 轨距 I Gauge	mm	4600
	J 配重离地间隙 J Ground clearance	mm	2065
	K 最低离地间隙 K Minimum ground clearance	mm	800
	L 尾部最小回转半径 L Tail least radius of gyration	mm	6040
	M 履带高度 M Track height	mm	1850
工作范围 Working range	A 最大挖掘高度 A Maximum digging height	mm	14385
	B 最大卸载高度 B Maximum dumping height	mm	9385
	C 最大挖掘深度 C Maximum digging depth	mm	8175
	D 8英尺水平面挖掘深度 D 8 feet depth of horizontal excavation	mm	8060
	E 最大垂直挖掘深度 E Maximum vertical mining depth	mm	4120
	F 最大挖掘半径 F Maximum digging radius	mm	15350
	G 最小回转半径 G Minimum swing radius	mm	7130

选装配置 Optional configuration	动臂长度 Boom length	mm	无
	斗杆长度 Bucket rod length	mm	无
	铲斗斗容 Bucket capacity	m^3	14.0（煤斗） 14.0 (Coal)

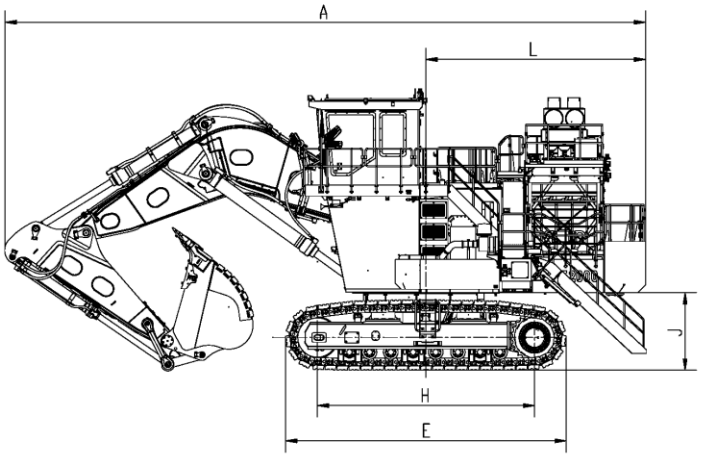
A
L
J
H
E

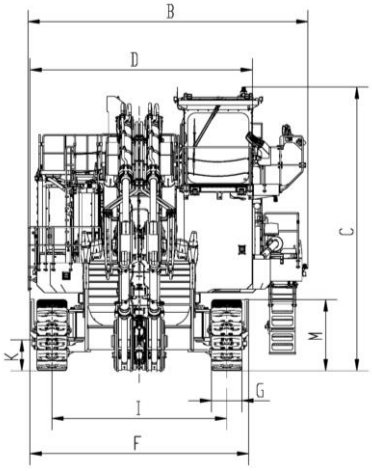
B
D
C
M
K
G
I
F

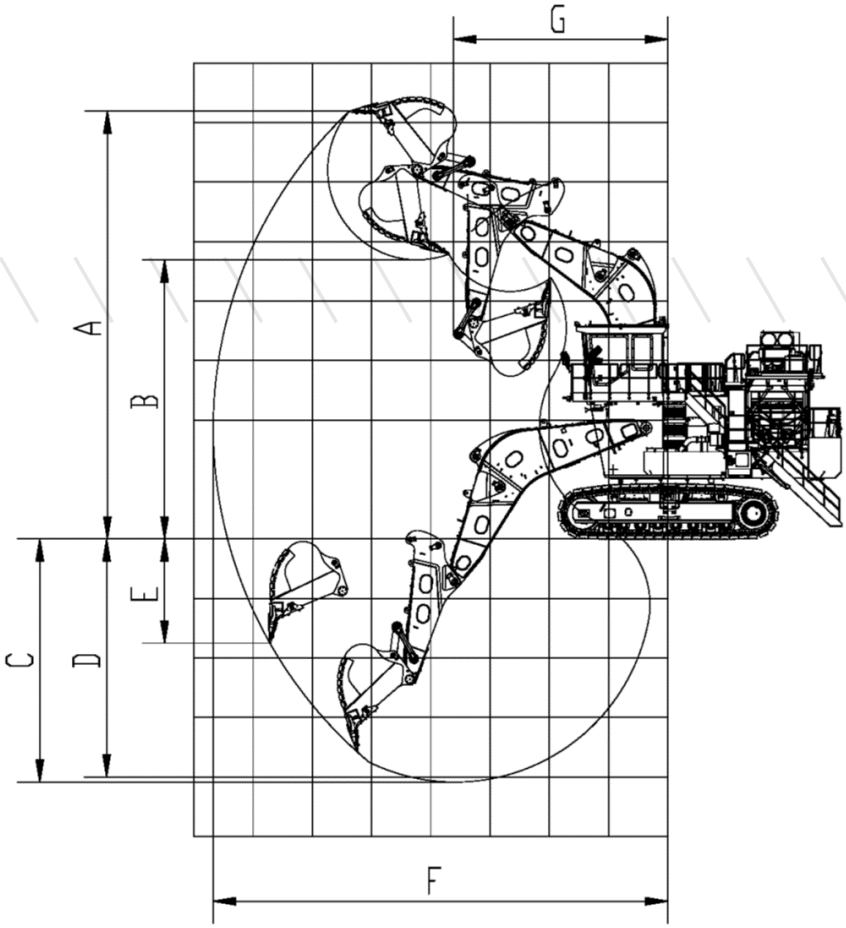
G
A
B
E
C
D
F

五、产品标配、选配清单

Ⅴ. Product Standard, Optional Components List

XE2000 液压挖掘机（反铲）标配、选配清单

XE2000 Hydraulic Excavator（Backhoe）Standard, Optional Components List

产品设计型号 ***Design model***		XE2000	***备注*** ***Remarks***
产品销售型号 ***Sales model***		XE2000	
适用区域 ***Used in***		中国大陆、低排放 Chinese mainland; low emission	
标配 **Standard**	发动机/电动机 Engine/ Electric motor	康明斯 Cummins	
	主阀 Main Valve	KYB	
	主泵 Main pump	川崎 Kawasaki	
	四轮一带 Four wheel and one crawler	徐工 XCMG	
	动臂长度(mm) Boom length(mm)	8300	
	斗杆长度(mm) Bucket rod length(mm)	3600	
	斗容(m^3) Bucket capacity(m^3)	12（岩石） 12 (Rock)	

	动臂长度(mm) Boom length(mm)	无	
	斗杆长度(mm) Bucket rod length(mm)	无	
	发动机低温加热系统 Engine low-temperature heating system	选配 Optional	
	自动灭火系统 Automatic Fire Extinguishing System	选配 Optional	
	集中加注系统 Centralized filling system	标配 Standard	
选配 **Optional**	油品采样系统 Oil sampling system	标配 Standard	
	破碎系统 Hydraulic crushing system	无	
	斗容（m3） Bucket capacity(m^3)	14.0（煤斗） 14.0 (Coal)	
	燃油箱快速加注 Fuel tank quick filling	标配 Standard	
	底盘全防护夹轨器 Chassis full guard rail clamp	无	
	驾驶室前防护 Driver's cab front guard	无	
	机棚和配重围栏 Coverings and counterweight enclosure	标配 Standard	

	电动爬梯/扶梯 Electric ladder/escalator	标配 Standard	

六、声明

VI.Declaration

本公司遵循可持续发展的原则，因此，我们保留在不预先通知的情况下，对产品进行持续改进的权力。相关内容的持续改进，恕不另行通知。

We follow the sustainable development principle and reserve the right to make improvements from time to time without prior notice.

徐州徐工矿业机械有限公司
XUZHOU XCMG MINING MACHINERY CO.,LTD.
地址：中国江苏省徐州市和平大道169号
Add: No.169,Heping Avenue,Xuzhou, Jiangsu Province, China
电话 Tel：+86-516-83113888
传真 Fax：+86-516-83113991
客服热线 Service Tel：4001109999
邮编 Post Code：221000
网址 Website：http://www.xcmg.com
版权所有侵权必究 All rights reserved, Violators will surely be prosecuted